Club Car®

2001-2003 ILLUSTRATED PARTS LIST

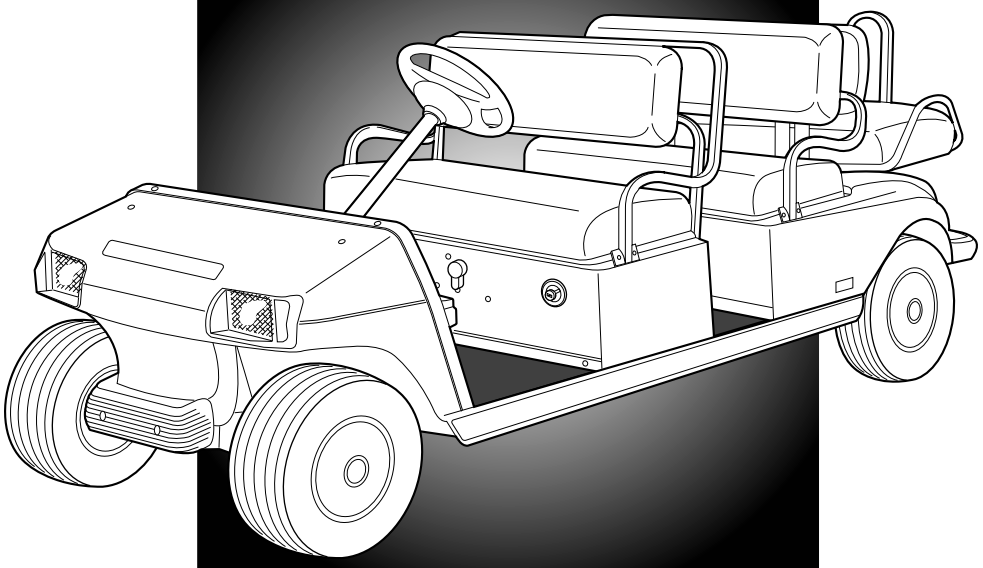

VILLAGER 4, VILLAGER 6,
VILLAGER 8, TRANSPORTER 4,
TRANSPORTER 6
GASOLINE/ELECTRIC
TRANSPORTATION VEHICLES

MANUAL NUMBER 102189903
EDITION CODE 0903B1004A

USING THE ILLUSTRATED PARTS LIST

⚠ WARNING

- **This manual is to be used only for identification and ordering of service parts. Be sure to read and use the maintenance and service manual before attempting any vehicle repairs.**

This manual covers all Villager 4, Villager 6, Villager 8, TransPorter 4, and TransPorter 6 vehicles built during 2001, 2002, and 2003 model years.

The manual is divided into 16 sections. Sections 1 through 15 pertain to the transportation vehicles, and Section 16 pertains to tools that are used on all Club Car products. Note that there are two flags on the outside edge of each page. The first flag contains the section number of which that page is a part. The other flag contains the letter G, signifying that the page pertains to the gasoline vehicle only.

Use the Table of Contents to find the sections and pages that contain the parts and assemblies you seek. The Table of Contents lists section numbers, and under them, the individual page titles and numbers to be found in that section. The index can be used to find specific parts and assemblies. The index is divided into numerical and alphabetical listings with the page numbers in italic text.

There is a two-page spread for each individual page title in the Table of Contents. On the left-hand page is an illustration showing the parts in their relative positions; the parts are each tagged with an item number in a balloon. The right-hand page is the parts list page, and gives the page title at the top, then the item numbers (corresponding to the numbers on the illustration), part descriptions, and quantity of parts used. Some item numbers have more than one part number because several configurations of a component are represented together on one spread.

There are some wiring diagrams in this manual that cover two pages. For these diagrams the parts list page will be on the next two-page spread.

Note that a part description may be indented. This indention corresponds to a parts assembly level indicated by the numbers 1, 2, 3, and 4 at the top left corner of the parts description area of the parts list page. A part that is indented to *level 2* is a component of the *level 1* part (assembly) that it is listed under. A *level 3* part is a component of the *level 2* part that it is listed under, and a *level 4* part is a component of the *level 3* part preceding it. In each case, the part quantity given for a level 2, 3, or 4 part *is the quantity used per next higher level assembly of which it is a component.* A part that is not indented is a *level 1* part. This means that the quantity given is the quantity used per the portion of the vehicle illustrated on that particular spread.

HOW TO ORDER PARTS

Replacement parts and accessories can be obtained from our network of authorized dealers and distributors. You can obtain the name and phone number of your closest Club Car contact by visiting our web site at www.clubcar.com and clicking on the "*Find a Dealer*" link or by calling our toll-free Service Parts and Technical Assistance hotline at (800) 872-2246 or (706) 863-3000, extension 3281 or 3854.

P. O. Box 204658
Augusta, Georgia 30917-4658 USA
Telephone 706-863-3000
Service Parts Fax 706-855-7413
www.clubcar.com

NOTE: *This illustrated parts list represents the most current information at the time of publication. Club Car, Inc. is continually working to further improve its vehicles and other products. These improvements may affect the parts used to service the vehicle. Any modification and/or significant change in specifications will be forwarded to all Club Car distributors/dealers and will, when applicable, appear in future editions of this illustrated parts list.*

Club Car, Inc. reserves the right to change specifications and designs at any time without notice and without the obligation of making changes to units previously sold.

Copyright © 2003 Club Car, Inc.
Club Car, PowerDrive, and *ArmorFlex*
are registered trademarks of Club Car, Inc.
This manual effective July 24, 2000.

The tables below highlight the differences between Villager and TransPorter vehicles. Use these tables as a guide when ordering parts for your vehicle.

For a complete list of vehicle specifications, refer to the vehicle's owner's manual or maintenance and service manual.

SPECIFICATIONS	Villager 4 Gasoline	Villager 4 Electric	Villager 6 Gasoline	Villager 6 Electric	Villager 8 Gasoline	Villager 8 Electric
Engine: FE290	•					
Engine: FE350			•		•	
Key switch: key-start			•		•	
Key switch: pedal-start	•	•		•		•
Electrical System: PowerDrive System 48				•		•
Electrical System: IQ System		see note				
Brakes: 2-wheel, self-adjusting	•	•				
Brakes: 4-wheel, manually-adjusting			•	•	•	•
Suspension: Front mono-leaf and rear multi-leaf springs	•	•				
Suspension: Front and rear multi-leaf springs			•	•	•	•
Standard light package			•	•	•	•

SPECIFICATIONS	TransPorter 4 Gasoline	TransPorter 4 Electric	TransPorter 6 Gasoline	TransPorter 6 Electric
Engine: FE350	•	•	•	•
Key switch: key-start	•		•	
Key switch: pedal-start		•		•
Brakes: 2-wheel, self-adjusting				
Brakes: 4-wheel, manually-adjusting	•	•	•	•
Suspension: Front mono-leaf and rear multi-leaf springs		•		•
Suspension: Front and rear multi-leaf springs	•		•	
Standard light package	•	•	•	•

NOTE: *2001 model-year Villager 4 electric vehicles used the PowerDrive System 48 electrical system. Beginning 2002 model-year , all Villager 4 electric vehicles use the IQ System.*

CONTENTS

SECTION 1 – BODY AND TRIM

Front Body 1-3
Dash and Floor Components 1-5
Rear Body and Fender – Villager 4 1-7
Front Seat Bottom and Armrests – Villager 4 1-9
Seat Backs, Rear Seat Bottom and Support Structure – Villager 4 1-11
Rear Footrest and Handrails – Villager 4, Villager 6, and Villager 8 1-13
Center Body and Trim – Villager 6 and Villager 8 1-15
Rear Body and Fender – Villager 6 and Villager 8 1-17
Seat Bottoms – Villager 6 and Villager 8 1-19
Seat Backs and ArmRests – Villager 6 and Villager 8 1-21
Rear-Facing Seat and Support – Villager 6 and Villager 8 1-23
First Seat and Support Structure –TransPorter 4 and TransPorter 6 1-25
Second Seat and Support Structure –TransPorter 4 and TransPorter 6 1-27
Third Seat and Components – TransPorter 6 1-29
Rear Footrest and Handrails – TransPorter 6 1-31
Rear Body Trim – TransPorter 4 and TransPorter 6 1-33
Rear Cargo Bed – TransPorter 4 1-35
Stake Side – TransPorter 4 1-37

SECTION 2 – WHEELS AND TIRES

Wheels and Tires – Villager 4 2-3
Wheels and Tires – Villager 6, Villager 8, TransPorter 4, and TransPorter 6 2-5

SECTION 3 – DECALS

Decals – Villager 4 3-3
Decals – Villager 4, Continued 3-5
Decals, Front Body – Villager 6 and Villager 8 3-7
Decals, Rear Body – Villager 6 3-9
Decals, Center and Rear Body – Villager 8 3-11
Decals – TransPorter 4 and TransPorter 6 3-13
Decals – TransPorter 4 and TransPorter 6, Continued 3-15
Decals – TransPorter 4 and TransPorter 6, Continued 3-17

SECTION 4 – BRAKES, PEDAL, AND CABLE ASSEMBLIES

Rear Brake Assembly, Self-Adjusting – Villager 4 4-3
Rear Brake Assembly, Manually Adjusted – Villager 6 and 8, TransPorter 4 and 6 4-5
Brake Pedal and Cable Assembly – Vehicle with Two-Wheel Brakes 4-7
Brake Pedal and Cable Assembly – Vehicle with Four-Wheel Brakes 4-9

CONTENTS

Front Brake Assembly – Vehicle with Four-Wheel Brakes 4-11
Accelerator Pedal Assembly – Villager 4, all Electric with MCOR, and Gasoline Vehicles 4-13
Accelerator Pedal Assembly – Electric Vehicles with Potentiometer 4-15

SECTION 5 – STEERING, FRONT AND REAR SUSPENSION

Steering Column 5-3
Steering Gear Assembly 5-5
Front Suspension, Upper – Villager 4 5-7
Front Suspension, Lower – Villager 4 5-9
Front Suspension, Upper – Villager 6, Villager 8, TransPorter 4, and TransPorter 6 5-11
Front Suspension, Lower – Villager 6, Villager 8, TransPorter 4, and TransPorter 6 5-13
Rear Suspension – Villager 4 5-15
Rear Suspension – Villager 6, Villager 8, TransPorter 4, and TransPorter 6 5-17
Stabilizer Bar – Gasoline Villager 6, Villager 8, TransPorter 4, and TransPorter 6 5-19

SECTION 6 – ELECTRICAL SYSTEM – GASOLINE VEHICLE

Forward/Reverse Shifter Assembly – Gasoline Vehicle 6-3
Wiring – Gasoline Villager 4 6-5
Electrical Component Box – Gasoline Villager 4 6-7
Electrical Components, Front Body – Gasoline Villager 4 6-9
Wiring – Gasoline Villager 6, Villager 8, TransPorter 4, and TransPorter 6 6-13
Electrical Component Box – Gasoline Villager 6 and 8, TransPorter 4 and 6 6-15
Electrical Components, Front Body – Gasoline Villager 6 and 8, TransPorter 4 and 6 6-17
Controls and Indicators – Gasoline Villager 6, Villager 8, TransPorter 4, and TransPorter 6 6-19
Electrical Components, Rear Body – Gasoline Villager 6 and Villager 8 6-21
Electrical Components, Rear Body – Gasoline TransPorter 4 and TransPorter 6 6-23
Starter/Generator Assembly 6-25
Starter/Generator Mounting 6-27
Battery – Gasoline Vehicle 6-29

SECTION 7 – ENGINE

FE290 Engine – Shrouds and Brackets 7-3
FE290 Engine – Ignition Components and Flywheel 7-5
FE290 Engine – Oil Circulation 7-7
FE290 Engine – Cylinder Head 7-9
FE290 Engine – Crankcase, Camshaft and Oil Sensor 7-11
FE290 Engine – Crankcase and Crankshaft 7-13
FE350 Engine – Shrouds and Brackets 7-15
FE350 Engine – Ignition Components and Flywheel 7-17
FE350 Engine – Oil Circulation 7-19

CONTENTS

FE350 Engine – Cylinder Head 7-21
FE350 Engine – Crankcase, Camshaft and Oil Sensor 7-23
FE350 Engine – Crankcase and Crankshaft 7-25
Engine Mounting 7-27

SECTION 8 – FUEL, INTAKE, AND GOVERNOR SYSTEMS

Fuel System 8-3
Carburetor Assembly, FE290 Engine – Villager 4 8-5
Carburetor Assembly, FE350 Engine – Villager 6, Villager 8, TransPorter 4, and TransPorter 6 8-7
Carburetor Installation 8-9
Governor and Accelerator Cables 8-11
Intake Duct, Choke, and Air Box Assembly – Villager 4 8-13
Intake Duct, Choke, and Air Box Assembly – Villager 6 and 8, TransPorter 4 and 6 8-15

SECTION 9 – EXHAUST SYSTEM

Exhaust System, FE290 – Villager 4 9-3
Exhaust System, FE350 – Villager 6, Villager 8, TransPorter 4, and TransPorter 6 9-5

SECTION 10 – TORQUE CONVERTER

Drive Clutch 10-3
Driven Clutch 10-5

SECTION 11 – UNITIZED TRANSAXLE – GASOLINE VEHICLE

Unitized Transaxle, Gasoline Vehicle – Gear Cases and Brackets 11-3
Unitized Transaxle, Gasoline Vehicle – F&R Transmission and Gear Reduction 11-5
Unitized Transaxle, Gasoline Vehicle – Differential and Axles 11-7

SECTION 12 – ELECTRICAL SYSTEM – ELECTRIC VEHICLE

Electrical Components, Front Body – Villager 4 Vehicle 12-3
Multi-Step Potentiometer – Villager 4 PowerDrive System 48 Vehicle 12-5
Wiring – Villager 4 PowerDrive System 48 Vehicle with Multi-Step Potentiometer 12-7
Motor Controller Output Regulator (MCOR) – PowerDrive System 48 and IQ System Vehicles 12-9
Wiring – Villager 4 PowerDrive System 48 Vehicle with MCOR 12-11
Forward/Reverse Switch – PowerDrive System 48 Vehicle 12-13
Batteries, Charger Receptacle – Villager 4 PowerDrive System 48 Vehicle 12-15
Computer, Controller, and Solenoid – Villager 4 PowerDrive System 48 Vehicle 12-17
Wiring – Villager 4 IQ System Vehicle 12-19
Forward/Reverse Switch, Tow/Run Switch – Villager 4 IQ System Vehicle 12-21
Batteries, Charger Receptacle – Villager 4 IQ System Vehicle 12-23

CONTENTS

Computer, Controller, and Solenoid – Villager 4 IQ System Vehicle 12-25
Continuously Variable Potentiometer – Villager 6 and 8, TransPorter 4 and 6 Vehicles 12-27
Wiring – PowerDrive System 48 Villager 6 and 8 with Continuously Variable Potentiometer 12-31
Wiring – PowerDrive System 48 Villager 6 and 8 Vehicles with MCOR 12-35
Electrical Components, Front Body –Villager 6 and 8, TransPorter 4 and 6 Vehicles 12-37
Controls and Indicators –Villager 6 and 8, TransPorter 4 and 6 Vehicles 12-39
Electrical Components, Center Body – Villager 6 and 8, TransPorter 4 and 6 Vehicles 12-41
Electrical Components, Center Body, Continued –Villager 6 and 8, TransPorter 4 and 6 Vehicles 12-43
Charger Receptacle – Villager 6 and Villager 8 Vehicles 12-45
Electrical Components, Rear Body –Villager 6 and Villager 8 Vehicles 12-47
Wiring – TransPorter 4 and TransPorter 6 with Continuously Variable Potentiometer 12-51
Wiring – TransPorter 4 and TransPorter 6 with Motor Controller Output Regulator (MCOR) 12-55
Electrical Components, Rear Body – TransPorter 4 and TransPorter 6 Vehicles 12-57

SECTION 13 – ELECTRIC MOTOR

Motor – PowerDrive System 48 Vehicle 13-3
Motor – IQ System Vehicle 13-5

SECTION 14 – TRANSAXLE – ELECTRIC VEHICLE

Transaxle, Type G – Electric Vehicle 14-3

SECTION 15 – BATTERY CHARGER

PowerDrive Battery Charger, Domestic – Villager 4, Villager 6, and Villager 8 15-3
PowerDrive 2 Charger, Domestic – Villager 4 15-5
PowerDrive Battery Charger, Export – Villager 4, Villager 6, and Villager 8 15-7
PowerDrive Battery Charger, European – Villager 4, Villager 6, and Villager 8 15-9
Onboard PowerDrive Battery Charger, Domestic – TransPorter 4 and TransPorter 6 15-11
Onboard PowerDrive Battery Charger, Export – TransPorter 4 and TransPorter 6 15-13

SECTION 16 – MAINTENANCE AND SERVICE TOOLS

Maintenance and Service Tools 16-3
Maintenance and Service Tools, Continued 16-5
Maintenance and Service Tools, Continued 16-7

SECTION i – INDEX

BODY AND TRIM

1

G

E

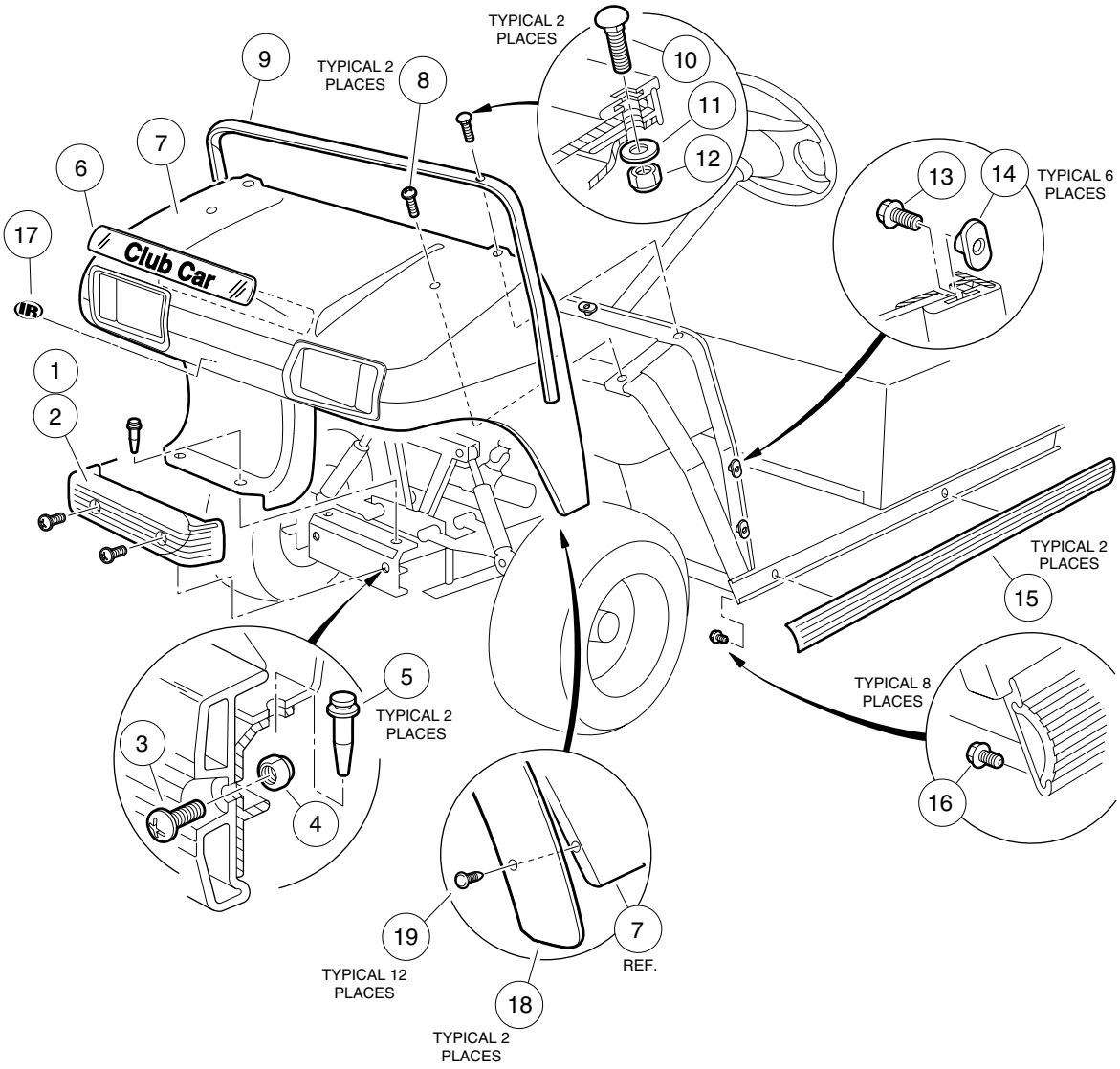
TYPICAL 2 PLACES
9
TYPICAL 2 PLACES
8
10
11
12
7
6
13
14
TYPICAL 6 PLACES
17
Club Car
IR
1
2
TYPICAL 2 PLACES
15
5
TYPICAL 2 PLACES
TYPICAL 8 PLACES
3
4
16
19
7
REF.
TYPICAL 12 PLACES
18
TYPICAL 2 PLACES

FRONT BODY

ITEM	PART NO.	DESCRIPTION	QTY GAS	QTY ELEC
		1 2 3 4		
1	1017080	Kit, Front Bumper (includes items 2 - 5)	1	1
2	1016868	Bumper, Front	1	1
3	7251	Screw, Phillips Truss-Head, 5/16-18 x 1	2	2
4	7473	Nut, Nylon Lock, 5/16-18	2	2
5	1016967	Rivet, Blind Push Type	2	2
6	101670201	Nameplate, Club Car (silver)	1	1
6	1014198	Nameplate, Club Car (gold)	1	1
7	101692501	Body, Front – Beige (Villager 4 only without headlights)	1	1
7	101692502	Body, Front – White	1	1
7	101692504	Body, Front – Gray	1	1
7	101692506	Body, Front – Red	1	1
7	101692509	Body, Front – Pacific Blue (royal blue)	1	1
7	101692510	Body, Front – Dark Green	1	1
7	101692511	Body, Front – Black	1	1
7	101692512	Body, Front – Classic Blue (Navy)	1	1
7	101692513	Body, Front – Burgundy	1	1
7	101692514	Body, Front – Dark Gray (TransPorter vehicles only)	1	1
7	101692515	Body, Front – Safety Yellow (TransPorter vehicles only)	1	1
7	101693901	Body, Front with Headlight Opening – Beige	1	1
7	101693902	Body, Front with Headlight Opening – White	1	1
7	101693904	Body, Front with Headlight Opening – Gray	1	1
7	101693906	Body, Front with Headlight Opening – Red	1	1
7	101693908	Body, Front with Headlight Opening – Pacific Blue (royal blue)	1	1
7	101693909	Body, Front with Headlight Opening – Dark Green	1	1
7	101693910	Body, Front with Headlight Opening – Black	1	1
7	101693911	Body, Front with Headlight Opening – Classic Blue (navy)	1	1
7	101693912	Body, Front with Headlight Opening – Burgundy	1	1
7	101693913	Body, Front with Headlight Opening – Dark Gray (TransPorters only)	1	1
7	101693914	Body, Front with Headlight Opening – Safety Yellow (TransPorters only)	1	1
8	7251	Screw, Phillips Truss-Head, 5/16-18 x 1	2	2
9	1011014	Trim, Front Body	1	1
10	1010435	Bolt, Carriage, 5/16-18 x 1	2	2
11	1241	Washer, Flat, 5/16	2	2
12	7473	Nut, Nylon Lock, 5/16-18	2	2
13	1011017	Screw, Flange Lock, #8-32 x 3/8	6	6
14	1011394	Nut, Slab Base “T” (package of 4 pieces)	1	1
15	101347501	Trim, Side Bumper Guard (Villager 4)	2	2
15	1016711	Trim, Side Bumper Guard (Villager 6)	2	2
15	101791901	Trim, Side Bumper Guard (Villager 8)	2	2
15	101347503	Trim, Side Bumper Guard (TransPorter 4 and TransPorter 6)	2	2
16	102310701	Screw, Hex Washer-Head, #8-18 x 3/8	8	8
17	102259001	Decal, IR (gold)	1	1
17	102259101	Decal, IR (silver)	1	1
18	101870401	Extrusion, Front Fender (vehicles with 4-wheel brakes)	2	2
19	1010434	Barrel, Plastic (vehicles with 4-wheel brakes)	12	12

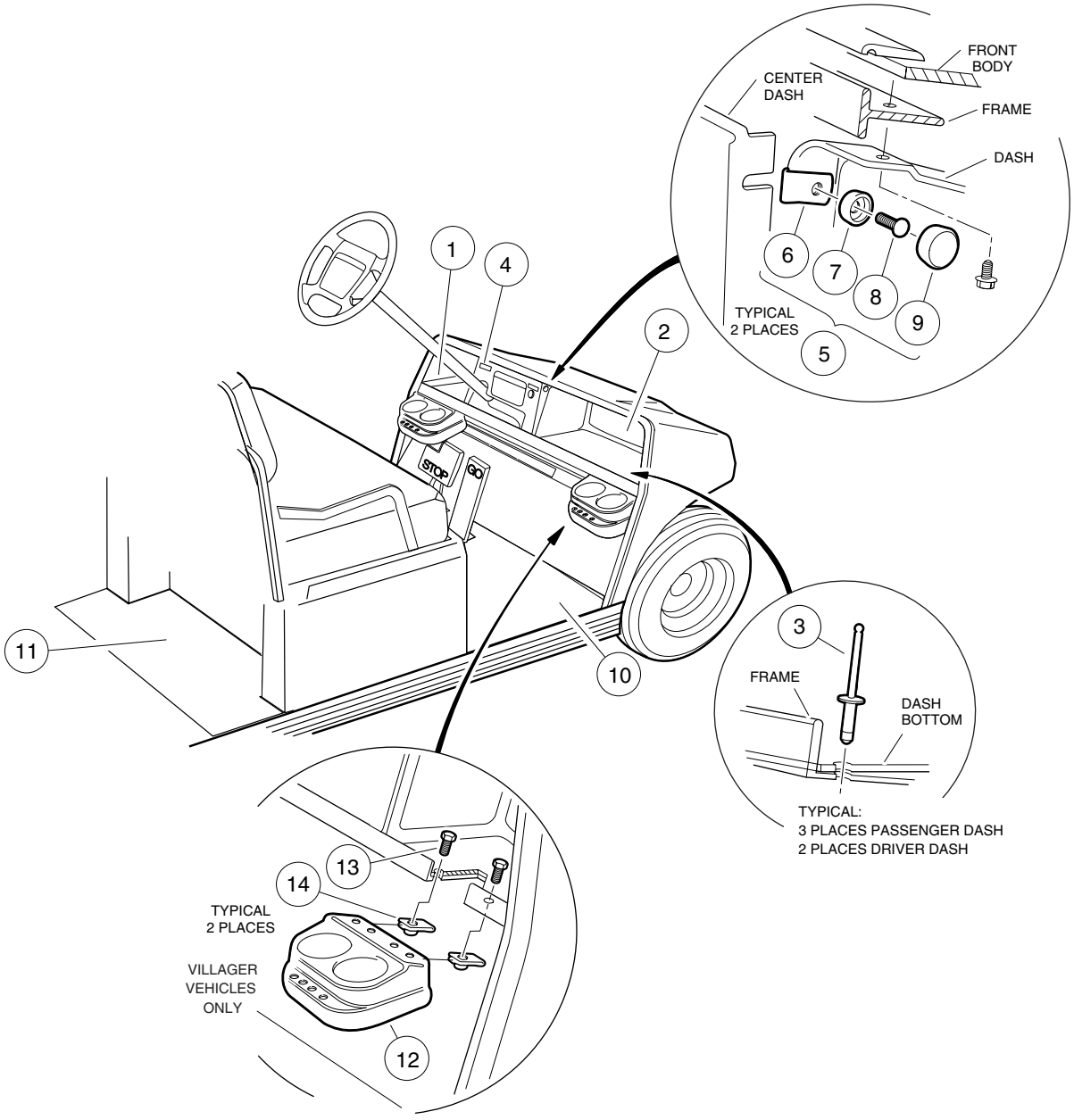
FRONT BODY
CENTER DASH
FRAME
DASH
6
7
8
9
TYPICAL 2 PLACES
5
1
4
2
STOP
GO
11
10
3
FRAME
DASH BOTTOM
TYPICAL:
3 PLACES PASSENGER DASH
2 PLACES DRIVER DASH
13
14
TYPICAL 2 PLACES
VILLAGER VEHICLES ONLY
12

DASH AND FLOOR COMPONENTS

ITEM	PART NO.	DESCRIPTION	QTY GAS	QTY ELEC
		1 2 3 4		
1	1013344	Component, Dash, Driver-Side (black)	1	1
2	1013343	Component, Dash, Passenger-Side (black)	1	1
3	7973	Rivet, Aluminum Pop, 3/16	5	5
4	101660404	Panel, Center Dash	1	1
5	1014645	Kit, Snap Washer (black) (includes items 6 - 9)	2	2
6	1011019	Nut, Speed, #10-32	1	1
7	1011382	Washer, Cup, #10	1	1
8	1620	Screw, Sheet Metal, #10 x 3/4	1	1
9	1013494	Cover, Screw-Head	1	1
10	1015032	Mat, Floor, Front	1	1
11	1017289	Mat, Floor, Rear (Villager 6 and Villager 8 only; Villager 8 requires quantity of 2)	1	1
11	1016718	Mat, Floor, Rear (TransPorter 4 and TransPorter 6 only)	1	1
12	101708301	Kit, Drink Holder (includes items 13 and 14) (Villager vehicles only)	2	2
13	7847	Screw, Hex-Head Cap, 1/4-20 x 3/4	2	2
14	1016952	U-Nut, 1/4-20	2	2

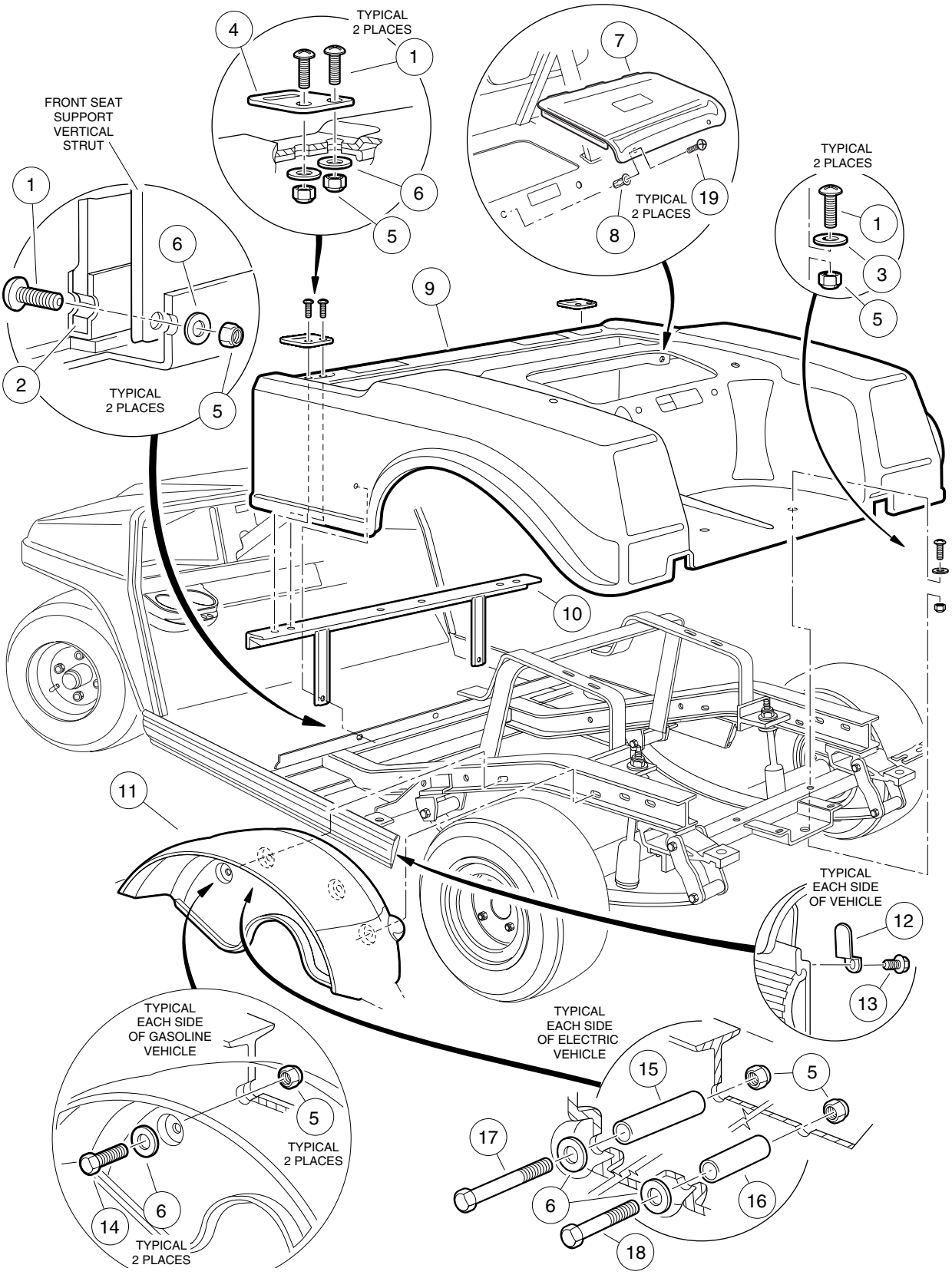
TYPICAL
2 PLACES
FRONT SEAT
SUPPORT
VERTICAL
STRUT
TYPICAL
2 PLACES
TYPICAL
2 PLACES
TYPICAL
2 PLACES
TYPICAL
EACH SIDE
OF VEHICLE
TYPICAL
EACH SIDE
OF GASOLINE
VEHICLE
TYPICAL
2 PLACES
TYPICAL
2 PLACES
TYPICAL
EACH SIDE
OF ELECTRIC
VEHICLE

REAR BODY AND FENDER – VILLAGER 4

ITEM	PART NO.	DESCRIPTION	QTY GAS	QTY ELEC
		1 2 3 4		
1	8251	Screw, Phillips-Head, 1/4-20 x 1	8	8
2	101904101	Plate, Body Kick	1	1
3	1014306	Washer, Flat, Type B, 1/4	2	2
4	1012412	Plate, Body Hinge	2	2
5	8233	Nut, Nylon Lock, 1/4-20	12	12
6	332	Washer, Flat, 1/4	10	10
7	1013032	Door, Access – Black	1	1
8	1015525	Nut, Blind, 1/4-20	2	2
9	101692601	Body, Rear – Beige	1	
9	101692602	Body, Rear – White	1	
9	101692604	Body, Rear – Gray	1	
9	101692606	Body, Rear – Red	1	
9	101692609	Body, Rear – Pacific Blue (royal blue)	1	
9	101692610	Body, Rear – Dark Green	1	
9	101692611	Body, Rear – Black	1	
9	101692612	Body, Rear – Classic Blue (navy)	1	
9	101692613	Body, Rear – Burgundy	1	
9	101693301	Body, Rear – Beige		1
9	101693302	Body, Rear – White		1
9	101693304	Body, Rear – Gray		1
9	101693306	Body, Rear – Red		1
9	101693309	Body, Rear – Pacific Blue (royal blue)		1
9	101693310	Body, Rear – Dark Green		1
9	101693311	Body, Rear – Black		1
9	101693312	Body, Rear – Classic Blue (navy)		1
9	101693313	Body, Rear – Burgundy		1
10	1017141	Support, Front Body	1	1
11	1017936	Fender, Inner	2	2
12	1017748	Clip, Body Keeper	2	2
13	102310701	Screw, Hex Washer-Head, #8-18 x 3/8	2	2
14	304	Screw, Hex-Head Cap, 1/4-20 x 1	4	
15	1017814	Spacer, 1-7/8		2
16	1017815	Spacer, 1/2		2
17	1012159	Screw, Hex-Head Cap, 1/4-20 x 2-3/4		2
18	7479	Screw, Hex-Head Cap, 1/4-20 x 1-1/4		2
19	8248	Screw, Phillips Truss-Head, 1/4-20 x 3/4	2	2

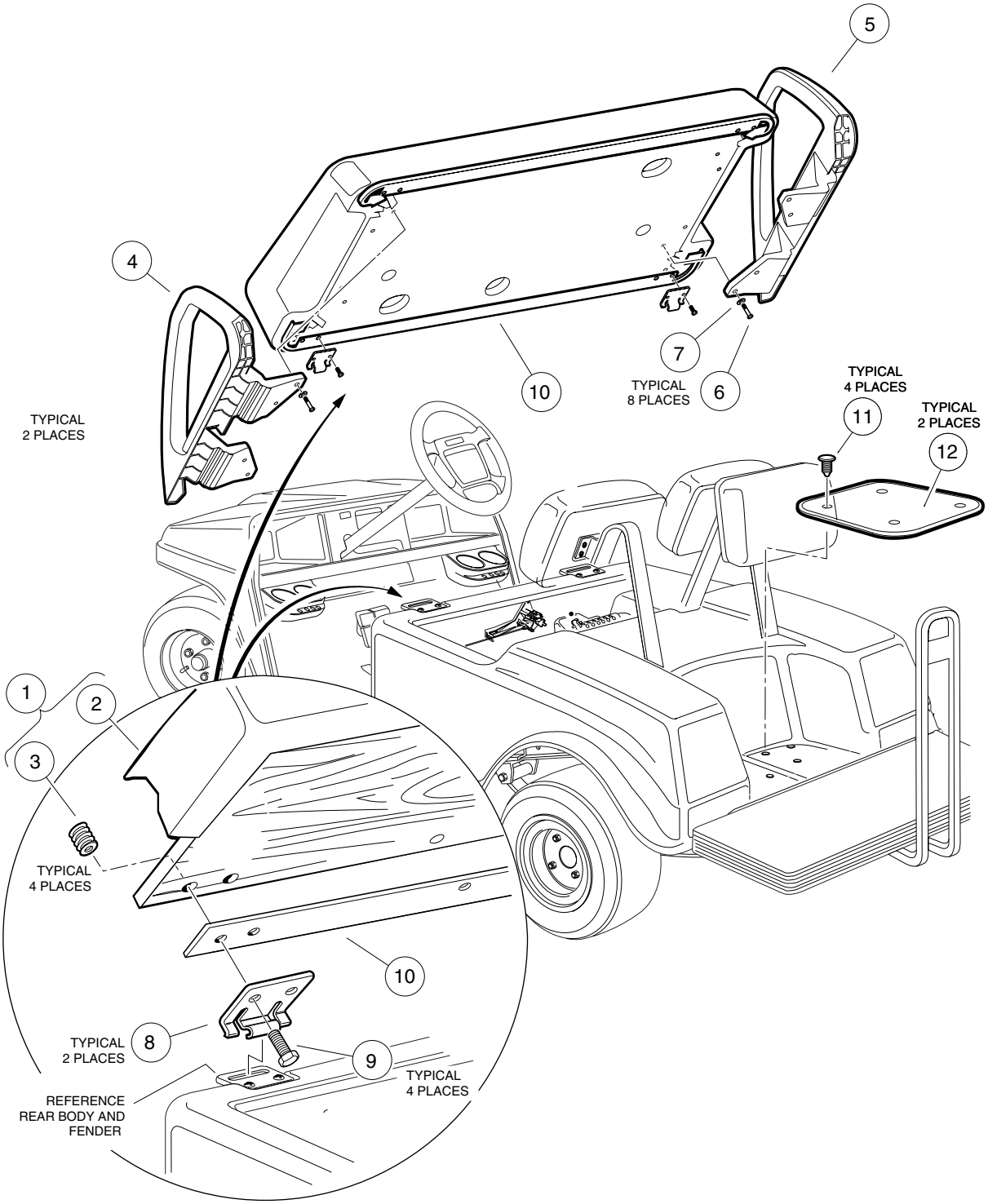
5
4
7
TYPICAL
8 PLACES
6
10
TYPICAL
2 PLACES
TYPICAL
4 PLACES
11
TYPICAL
2 PLACES
12
1
2
3
TYPICAL
4 PLACES
10
TYPICAL
2 PLACES
8
9
TYPICAL
4 PLACES
REFERENCE
REAR BODY AND
FENDER

FRONT SEAT BOTTOM AND ARMRESTS – VILLAGER 4

ITEM	PART NO.	DESCRIPTION	QTY GAS	QTY ELEC
		1 2 3 4		
1	102174201	Assembly, Seat Bottom – Buff (includes items 2 and 3)	1	1
1	102174202	Assembly, Seat Bottom – White (includes items 2 and 3)	1	1
1	102174204	Assembly, Seat Bottom – Black (includes items 2 and 3)	1	1
1	102174205	Assembly, Seat Bottom – Gray (includes items 2 and 3)	1	1
2	101998201	Cover, Vinyl Seat Bottom – Buff	1	1
2	101998202	Cover, Vinyl Seat Bottom – White	1	1
2	101998204	Cover, Vinyl Seat Bottom – Black	1	1
2	101998205	Cover, Vinyl Seat Bottom – Gray	1	1
3	1010543	Insert, Wood	4	4
4	101987601	Armrest, Driver-Side	1	1
5	101985501	Armrest, Passenger-Side	1	1
6	1016916	Screw, Hex-Head Cap, 1/4-20 x 1-1/2	8	8
7	332	Washer, Flat, Type A	8	8
8	1011652	Plate, Seat Hinge, Stainless Steel	2	2
9	101954301	Screw, Hex-Head Cap, 1/4-20 x 3/4 (with patch)	4	4
10	101998501	Gasket, Seat	2	2
11	1014392	Mat, Bag Rest	2	2
12	1010434	Barrel, Plastic	8	8

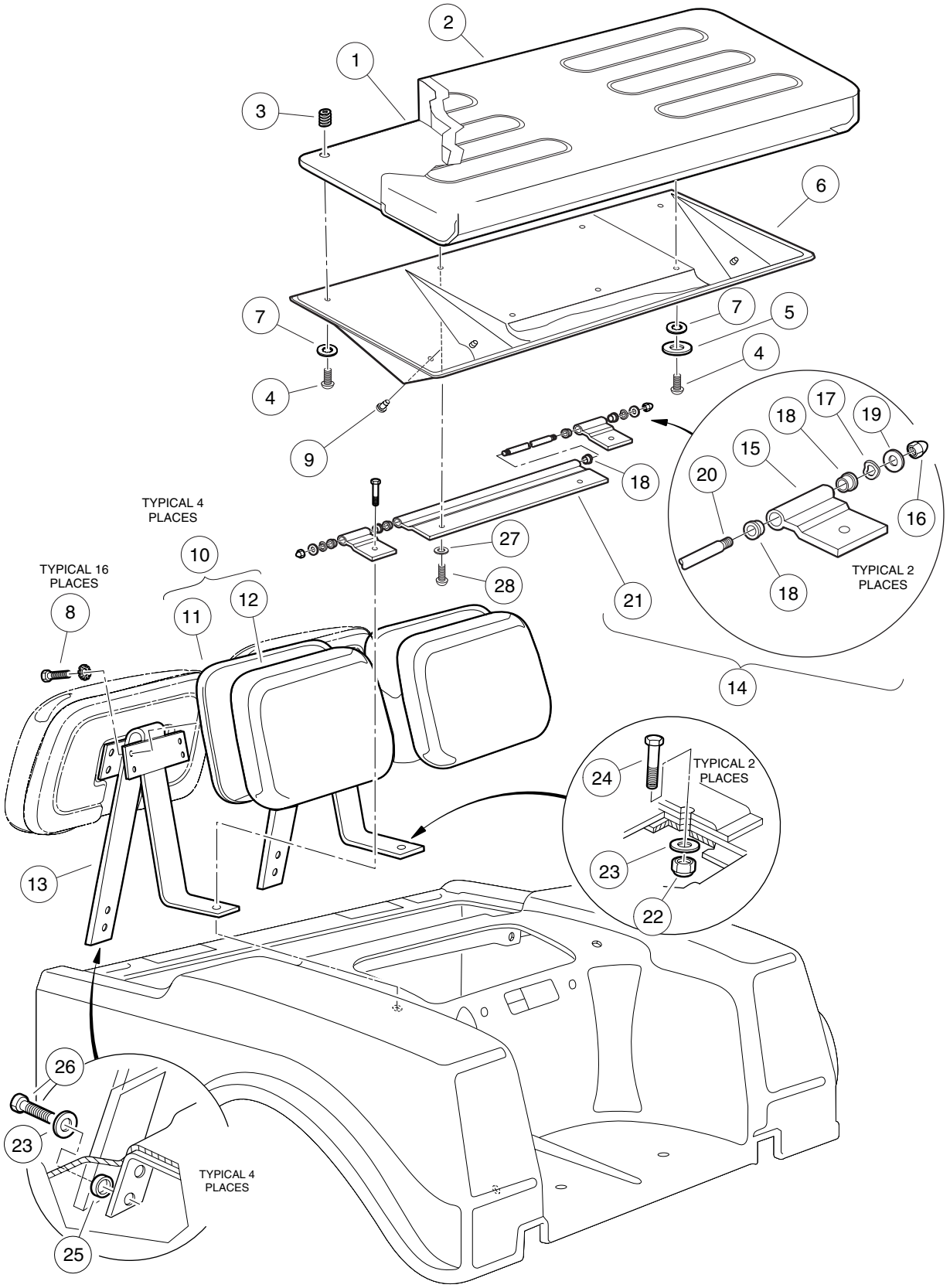
TYPICAL 4 PLACES
TYPICAL 16 PLACES
TYPICAL 2 PLACES
TYPICAL 2 PLACES
TYPICAL 4 PLACES

SEAT BACKS, REAR SEAT BOTTOM AND SUPPORT STRUCTURE – VILLAGER 4

ITEM	PART NO.	DESCRIPTION	QTY GAS	QTY ELEC
		1 2 3 4		
1	101564805	Assembly, Seat Bottom – White (includes items 2 and 3)	1	1
1	101564807	Assembly, Seat Bottom – Gray (includes items 2 and 3)	1	1
1	101564808	Assembly, Seat Bottom – Black (includes items 2 and 3)	1	1
2	101562702	Cover, Vinyl Seat Bottom – White	1	1
2	101562704	Cover, Vinyl Seat Bottom – Black	1	1
2	101562710	Cover, Vinyl Seat Bottom – Gray	1	1
3	1010543	Insert, Wood	7	7
4	8251	Screw, Phillips Truss-Head, 1/4-20 x 1	5	5
5	1011578	Washer, Flat, 5/16	3	3
6	1011210	Support, Seat	1	1
7	8304	Washer, Internal Tooth Lock, 1/4	5	5
8	101954301	Screw, Hex-Head Cap (with adhesive patch), 1/4-20 x 3/4	16	16
9	1011389	Bumper, Rubber (package of 5)	1	1
10	101565202	Assembly, Seat Back, Thin – White (includes items 11 and 12)	4	4
10	101565205	Assembly, Seat Back, Thin – Black (includes items 11 and 12)	4	4
10	101565206	Assembly, Seat Back, Thin – Gray (includes items 11 and 12)	4	4
11	1013335	Cap, Seat Back – Black	1	1
12	101562602	Cover, Vinyl Seat Back – White	1	1
12	101562604	Cover, Vinyl Seat Back – Black	1	1
12	101562605	Cover, Vinyl Seat Back – Gray	1	1
13	1011182	Support, Seat Back	2	2
14	1011219	Assembly, Hinge (includes items 15 - 21)	1	1
15	1011221	Hinge, Short	2	2
16	1015091	Nut, Centerlock Cap, 1/4-20 x 1/4	2	2
17	1010695	Washer, Curved Spring, 1/4	2	2
18	8028	Bushing, Nylon	6	6
19	332	Washer, Flat, 1/4	2	2
20	1011222	Pin, Hinge, Long	1	1
21	1011220	Hinge, Long	1	1
22	7473	Nut, Nylon Lock, 5/16-18	2	2
23	1241	Washer, Flat, 5/16	6	6
24	1010577	Screw, Hex-Head Cap, 5/16-18 x 1-1/2	2	2
25	1017774	Spacer, Body	4	4
26	101910401	Screw, Thread-Forming, 5/16-18 x 1-1/4	4	4
27	1014007	Washer, Lock, 1/4	2	2
28	1016916	Screw, Hex-Head Cap, With Nylon Patch, 1/4-20 x 1-1/2	2	2

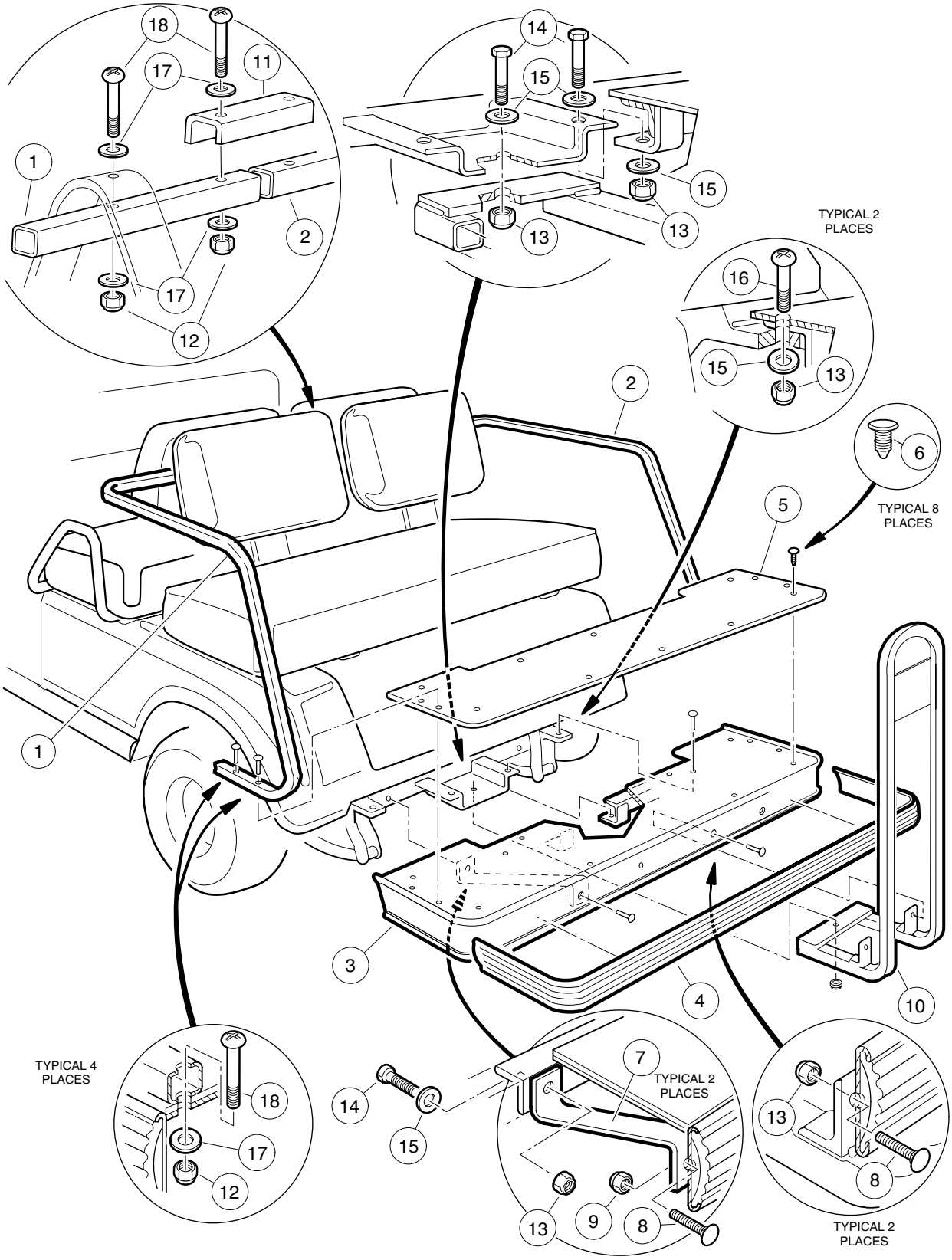
18
17
11
1
2
17
12
14
15
15
13
13
TYPICAL 2
PLACES
16
15
13
2
6
TYPICAL 8
PLACES
5
1
3
4
10
TYPICAL 4
PLACES
18
17
12
14
15
7
TYPICAL 2
PLACES
13
9
8
13
8
TYPICAL 2
PLACES

REAR FOOTREST AND HANDRAILS – VILLAGER 4, VILLAGER 6, AND VILLAGER 8

ITEM	PART NO.	DESCRIPTION	QTY GAS	QTY ELEC
		1 2 3 4		
1	101841202	Armrest, Rear Seat, Driver-Side	1	1
2	101841201	Armrest, Rear Seat, Passenger-Side	1	1
3	101841101	Assembly, Rear Footrest (includes items 4 - 9)	1	1
4	101347505	Guard, Bumper	1	1
5	101840901	Mat, Footrest	1	1
6	1010434	Fastener, Plastic Barrel	8	8
7	1016668	Bar, Connecting	2	2
8	1010435	Bolt, Carriage, 5/16-18 x 1	4	4
9	7473	Nut, Nylon Lock, 5/16-18	2	2
10	1016842	Handrail, Rear Seat	1	1
11	101841301	Bracket, Armrest	1	1
12	8233	Nut, Nylon Lock, 1/4-20	8	8
13	7473	Nut, Nylon Lock, 5/16-18	9	9
14	1218	Screw, Hex-Head Cap, 5/16-18 x 1-1/4	5	5
15	1241	Washer, Flat, 5/16	9	9
16	7410	Screw, Truss-Head, 5/16-18 x 1-1/4	2	2
17	332	Washer, Flat, 1/4	8	8
18	1011988	Screw, Phillips Truss-Head, 1/4-20 x 2	8	8

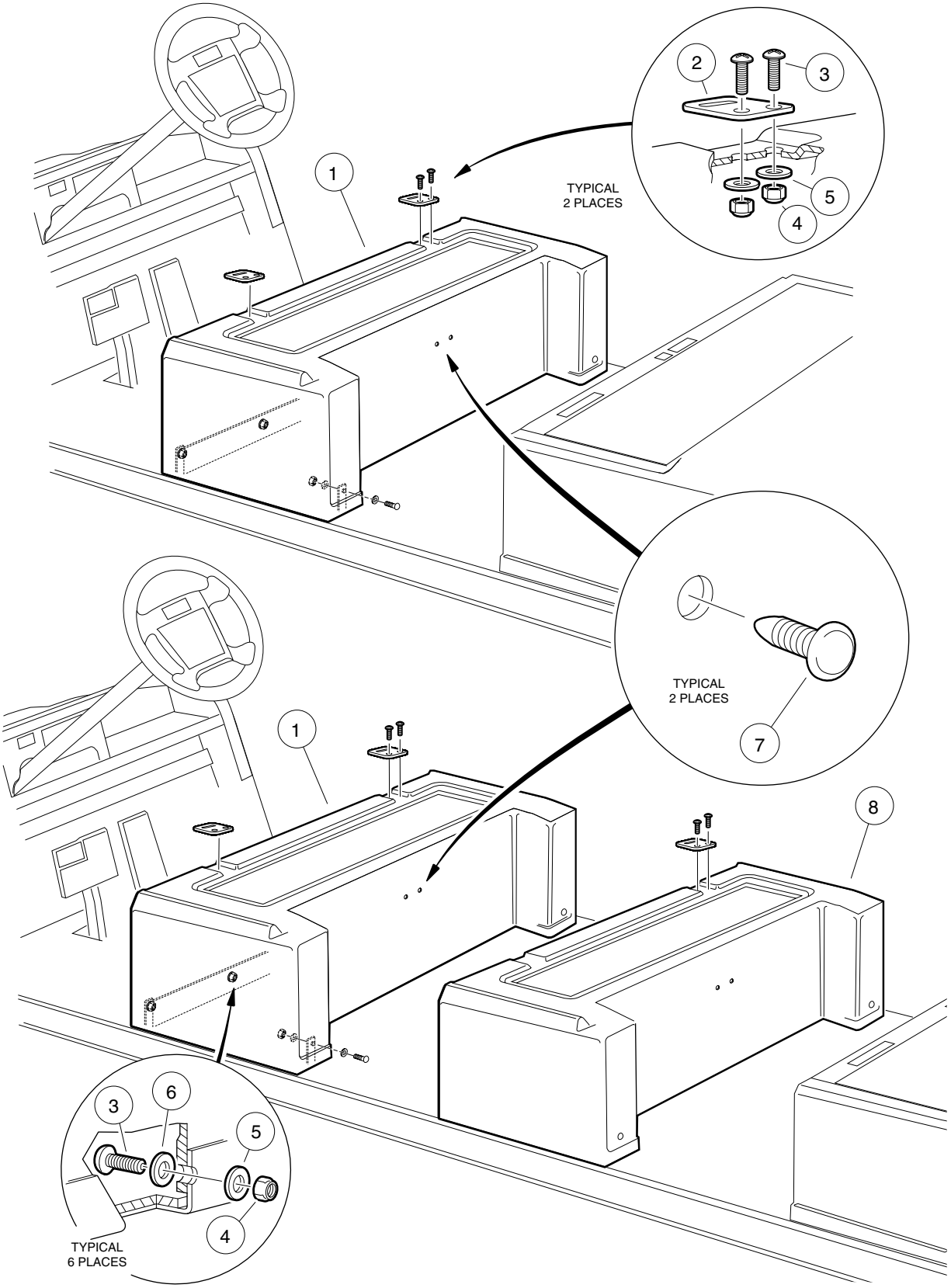
1
2
3
4
5
TYPICAL
2 PLACES
1
7
TYPICAL
2 PLACES
1
8
3
6
5
4
TYPICAL
6 PLACES

CENTER BODY AND TRIM – VILLAGER 6 AND VILLAGER 8

ITEM	PART NO.	DESCRIPTION	QTY GAS	QTY ELEC
		1 2 3 4		
1	101731601	Body, Center – Beige	1	1
1	101731602	Body, Center – White	1	1
1	101731604	Body, Center – Gray	1	1
1	101731606	Body, Center – Red	1	1
1	101731608	Body, Center – Pacific Blue (royal blue)	1	1
1	101731609	Body, Center – Dark Green	1	1
1	101731610	Body, Center – Black	1	1
1	101731611	Body, Center – Classic Blue (navy)	1	1
1	101731612	Body, Center – Burgundy	1	1
2	1012412	Plate, Seat Hinge	2	2
3	8251	Screw, Phillips Truss-Head, 1/4-20 x 1	10	10
4	8233	Nut, Nylon Lock, 1/4-20	10	10
5	332	Washer, Flat, 1/4	10	10
6	1012581	Washer, Nylon Cup, 1/4	6	6
7	1010434	Barrel, Plastic	2	2
		Villager 8 vehicles only*:		
8	101788201	Body, Mid-Center – Beige	1	1
8	101788202	Body, Mid-Center – White	1	1
8	101788204	Body, Mid-Center – Gray	1	1
8	101788206	Body, Mid-Center – Red	1	1
8	101788208	Body, Mid-Center – Pacific Blue (royal blue)	1	1
8	101788209	Body, Mid-Center – Dark Green	1	1
8	101788210	Body, Mid-Center – Black	1	1
8	101788211	Body, Mid-Center – Classic Blue (navy)	1	1
8	101788212	Body, Mid-Center – Burgundy	1	1
		*NOTE: The mid-center body uses the same hardware (items 2 - 7) as the center body (item 1).		

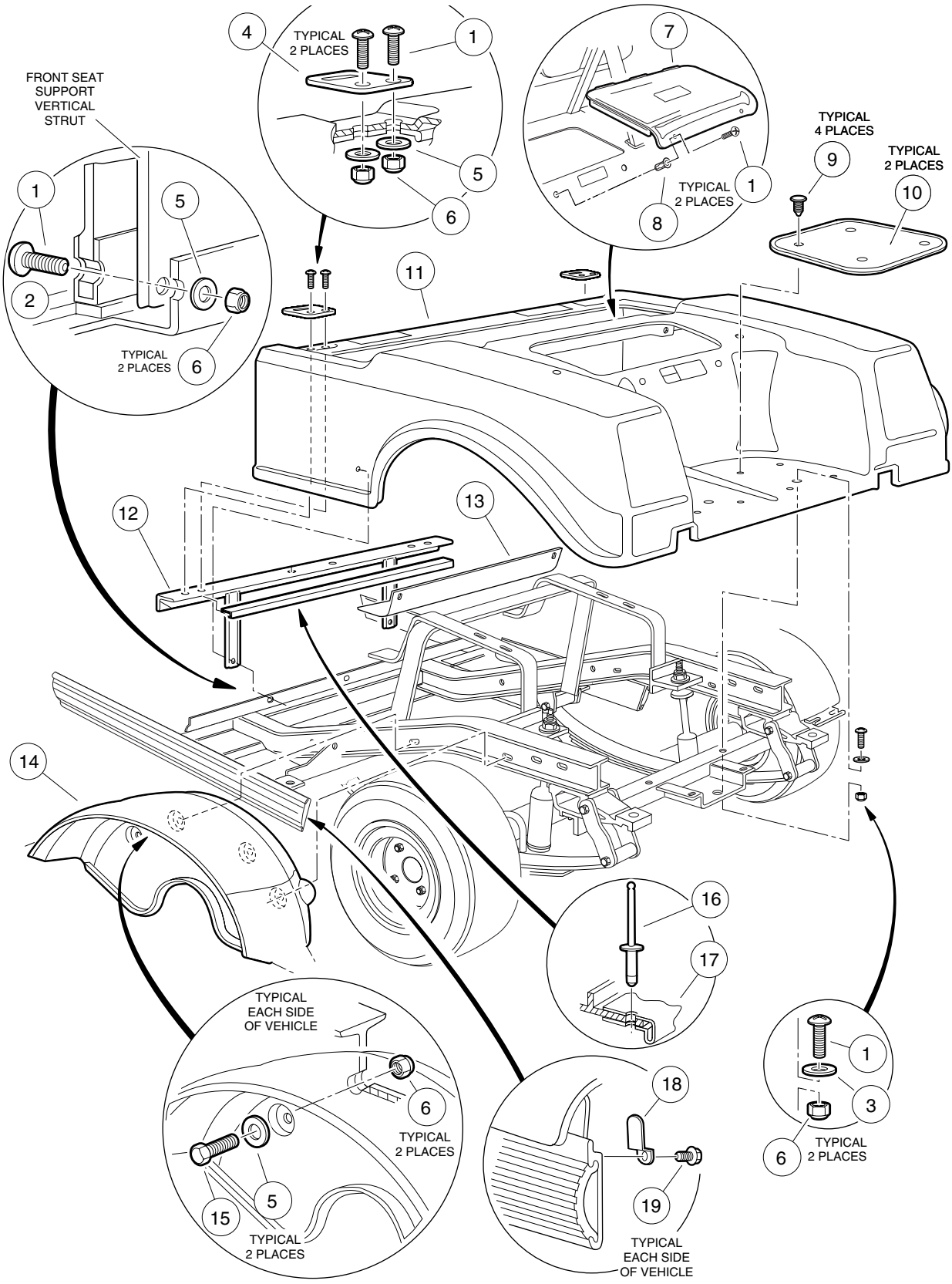
FRONT SEAT SUPPORT VERTICAL STRUT
TYPICAL 2 PLACES
TYPICAL 4 PLACES
TYPICAL EACH SIDE OF VEHICLE
1
2
3
4
5
6
7
8
9
10
11
12
13
14
15
16
17
18
19

REAR BODY AND FENDER – VILLAGER 6 AND VILLAGER 8

ITEM	PART NO.	DESCRIPTION	QTY GAS	QTY ELEC
		1 2 3 4		
1	8251	Screw, Phillips Truss-Head, 1/4-20 x 1	10	10
2	101904101	Plate, Body Kick	1	1
3	1014306	Washer, Flat, Type B, 1/4	2	2
4	1012412	Plate, Body Hinge	2	2
5	332	Washer, Flat, 1/4	10	10
6	8233	Nut, Nylon Lock, 1/4-20	12	12
7	1013032	Door, Access – Black	1	1
8	1015525	Nut, Blind, 1/4-20	2	2
9	1010434	Barrel, Plastic	8	8
10	1014392	Mat, Bag Rest	2	2
11	101728701	Body – Beige	1	1
11	101728702	Body – White	1	1
11	101728704	Body – Gray	1	1
11	101728706	Body – Red	1	1
11	101728708	Body – Pacific Blue (royal blue)	1	1
11	101728709	Body – Dark Green	1	1
11	101728710	Body – Black	1	1
11	101728711	Body – Classic Blue (navy)	1	1
11	101728712	Body – Burgundy	1	1
12	1017141	Support, Front Body	1	1
13	101806901	Shield, Heat (gasoline vehicles only)	1	
14	1017936	Fender, Inner	2	2
15	7847	Screw, Hex Washer-Head, 1/4-20 x 3/4	4	4
16	1013357	Rivet, Pop (electric vehicle only)		2
17	101837001	Insulator, Battery (electric vehicle only)		1
18	1017748	Clip, Body Keeper	2	2
19	102310701	Screw, Hex Washer-Head, #8-18 x 3/8	2	2

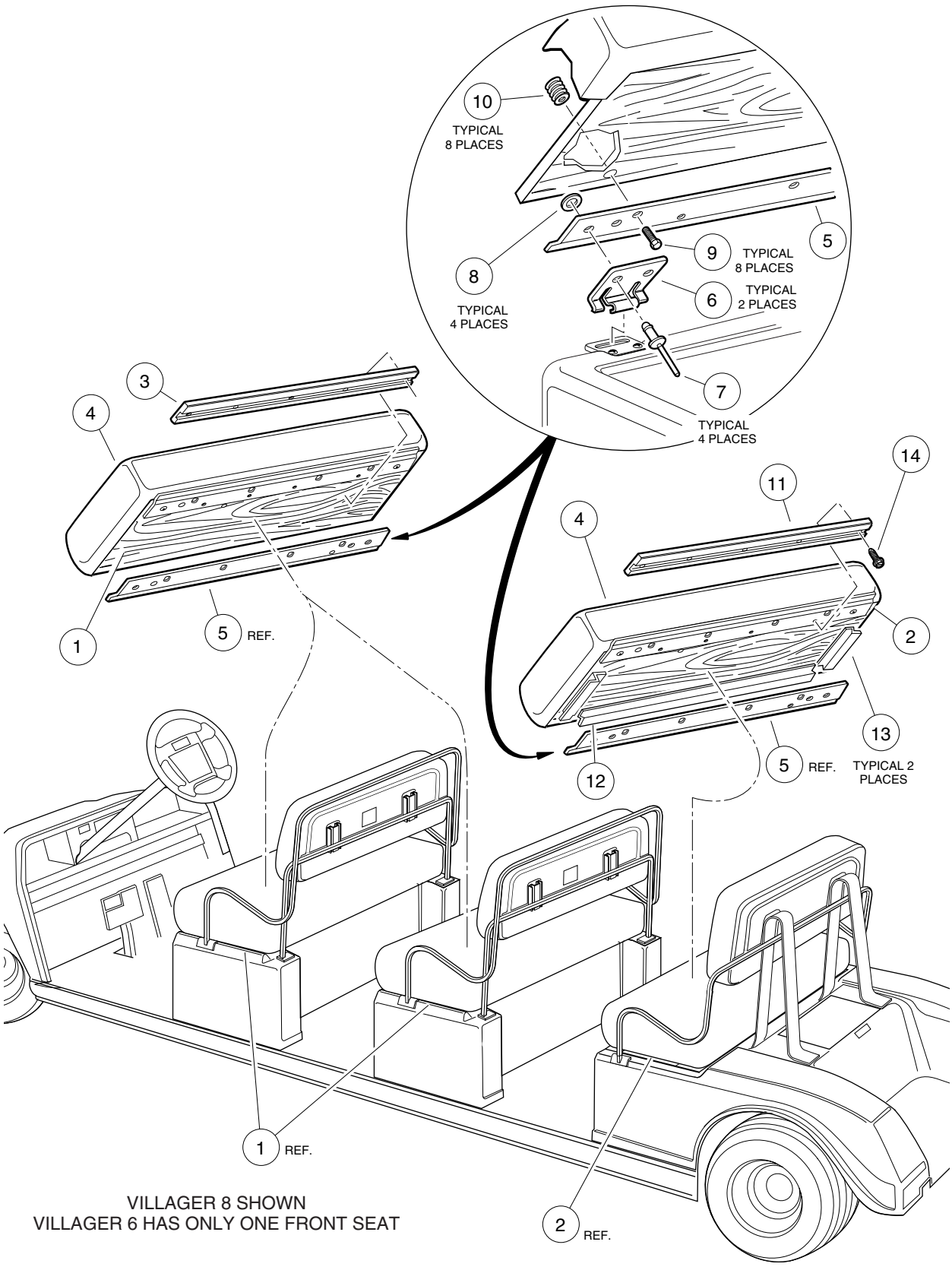

VILLAGER 8 SHOWN
VILLAGER 6 HAS ONLY ONE FRONT SEAT

SEAT BOTTOMS – VILLAGER 6 AND VILLAGER 8

ITEM	PART NO.	DESCRIPTION	QTY GAS	QTY ELEC
		1 2 3 4		
1	101728201	Assembly, Front Seat Bottom – White (includes items 3 - 10)	1	1
1	101728203	Assembly, Front Seat Bottom – Buff (includes items 3 - 10)	1	1
1	101728210	Assembly, Front Seat Bottom – Black (includes items 3 - 10)	1	1
1	101728213	Assembly, Front Seat Bottom – Gray (includes items 3 - 10)	1	1
2	101728202	Assembly, Rear Seat Bottom – White (includes items 4 - 14)	1	1
2	101728204	Assembly, Rear Seat Bottom – Buff (includes items 4 - 14)	1	1
2	101728211	Assembly, Rear Seat Bottom – Black (includes items 4 - 14)	1	1
2	101728214	Assembly, Rear Seat Bottom – Gray (includes items 4 - 14)	1	1
3	1013312	Bumper, Seat – Long (first seat only)	1	1
4	101562701	Cover, Vinyl Seat Bottom – Buff	1	1
4	101562702	Cover, Vinyl Seat Bottom – White	1	1
4	101562704	Cover, Vinyl Seat Bottom – Black	1	1
4	101562710	Cover, Vinyl Seat Bottom – Gray	1	1
5	1017695	Bracket, Seat Support	2	2
6	1011652	Plate, Seat Hinge	2	2
7	101880901	Rivet, Pop, Stainless Steel, 3/16	4	4
8	101881701	Washer, Flat, Stainless Steel, #8	4	4
9	101954301	Screw, Hex-Head Cap (with adhesive patch), 1/4-20 x 3/4	8	8
10	1010543	Insert, Wood	8	8
11	1012597	Bumper, Seat (rear seat only)	1	1
12	1012657	Gasket, Seat – Long (rear seat only)	1	1
13	1012656	Gasket, Seat – Short (rear seat only)	2	2
14	1017384	Screw, Washer-Head Tap, #12 (rear seat only)	5	5

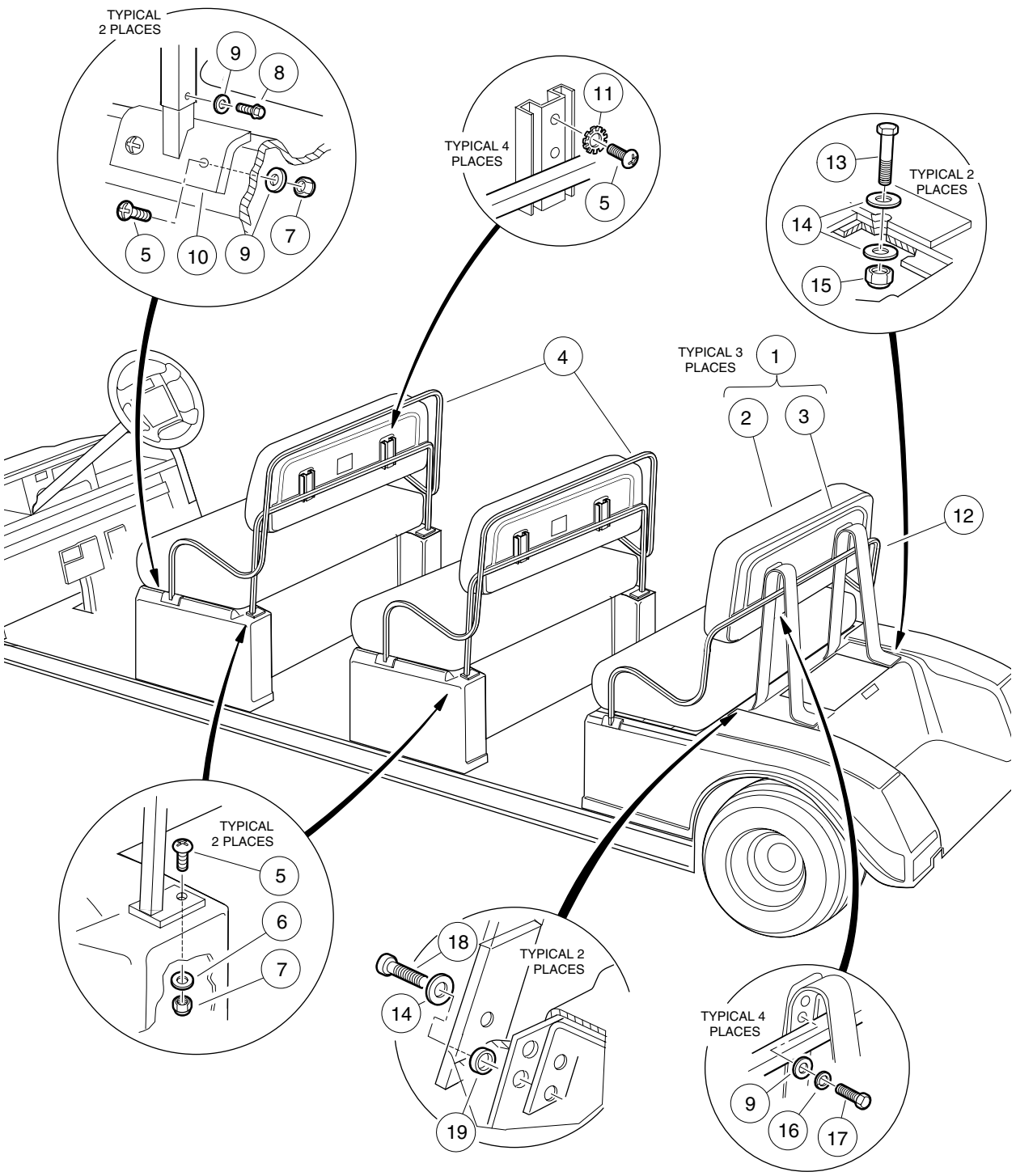

VILLAGER 8 SHOWN
VILLAGER 6 HAS ONLY ONE FRONT SEAT

SEAT BACKS AND ARMRESTS – VILLAGER 6 AND VILLAGER 8

ITEM	PART NO.	DESCRIPTION	QTY GAS	QTY ELEC
		1 2 3 4		
1	101677701	Assembly, Seat Back – White (includes items 2 and 3)	1	1
1	101677702	Assembly, Seat Back – Black (includes items 2 and 3)	1	1
1	101677703	Assembly, Seat Back – Buff (includes items 2 and 3)	1	1
1	101677705	Assembly, Seat Back – Gray (includes items 2 and 3)	1	1
2	101675501	Cover, Vinyl Seat Back – Buff	1	1
2	101675502	Cover, Vinyl Seat Back – White	1	1
2	101675504	Cover, Vinyl Seat Back – Black	1	1
2	101675506	Cover, Vinyl Seat Back – Gray	1	1
3	1016751	Cap, Seat Back – Black	1	1
4	1017259	Weldment, Front Armrest (quantity 2 for Villager 8)	1	1
5	1015902	Screw, Phillips Truss-Head, 1/4-20 x 1-1/4 (quantity 20 for Villager 8)	10	10
6	1014306	Washer, Flat, Type B, 1/4 (quantity 4 for Villager 8)	2	2
7	8233	Nut, Nylon Lock, 1/4-20 (quantity 12 for Villager 8)	6	6
8	1012285	Screw, Thread-Rolling, 1/4-20 x 5/8 (quantity 4 for Villager 8)	2	2
9	332	Washer, Flat, 1/4 (quantity 16 for Villager 8)	10	10
10	1017310	Weldment, Armrest Mounting (quantity 4 for Villager 8)	2	2
11	101946201	Washer, External Tooth Lock, 1/4 (quantity 8 for Villager 8)	4	4
12	101799201	Weldment, Rear Armrest	1	1
13	1218	Screw, Hex-Head Cap, 5/16-18 x 1-1/4	2	2
14	1241	Washer, Flat, 5/16	8	8
15	7473	Nut, Nylon Lock, 5/16-18	2	2
16	451	Washer, Lock, 1/4	4	4
17	101954301	Screw, Hex-Head Cap (with adhesive patch), 1/4-20 x 3/4	4	4
18	101910401	Screw, Thread-Forming, 5/16-18 x 1-1/4	4	4
19	1017774	Spacer, Body	4	4

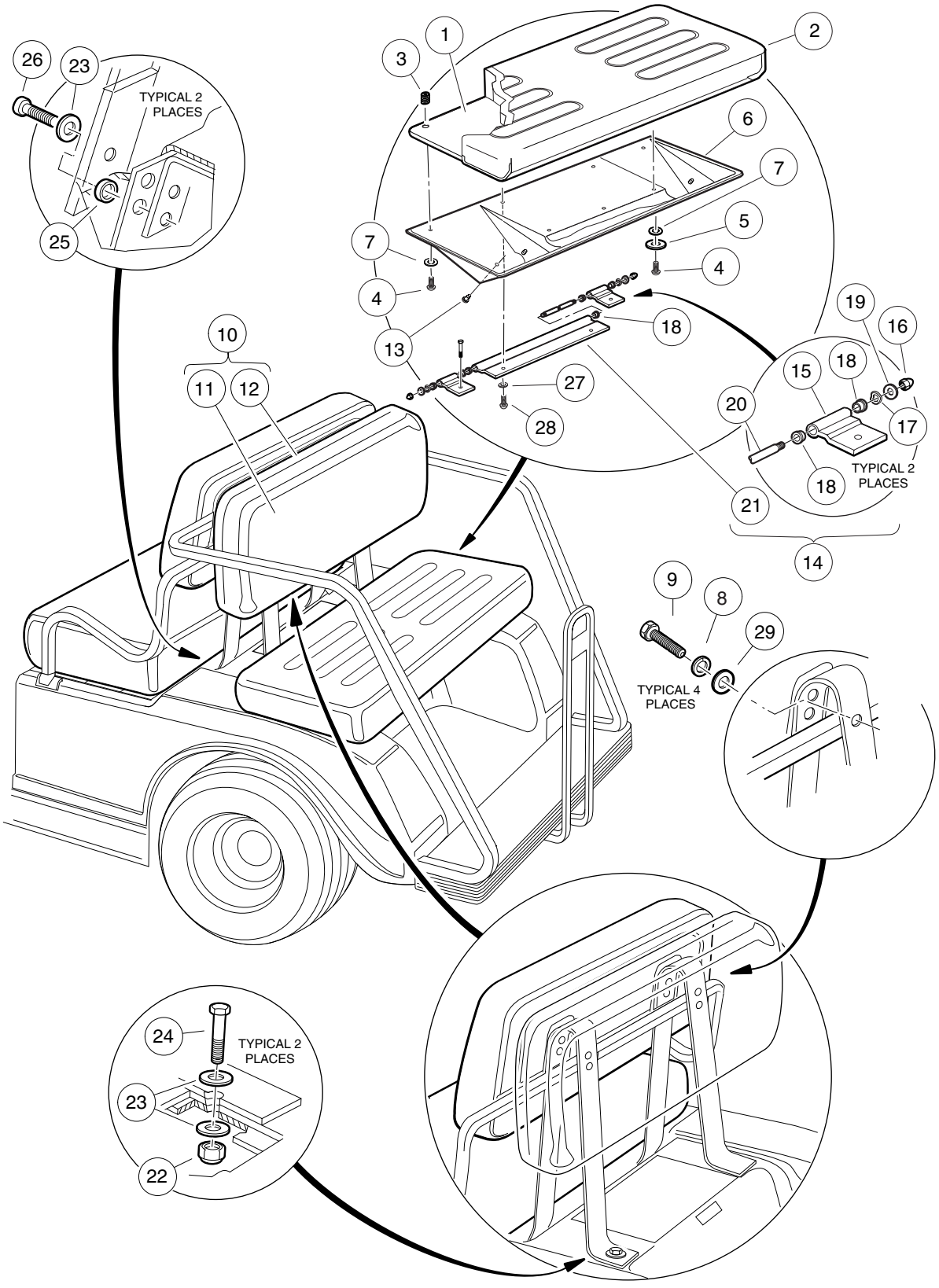
TYPICAL 2 PLACES
TYPICAL 2 PLACES
TYPICAL 4 PLACES
TYPICAL 2 PLACES

REAR-FACING SEAT AND SUPPORT – VILLAGER 6 AND VILLAGER 8

ITEM	PART NO.	DESCRIPTION	QTY GAS	QTY ELEC
		1 2 3 4		
1	101564804	Assembly, Seat Bottom – Buff (includes items 2 and 3)	1	1
1	101564805	Assembly, Seat Bottom – White (includes items 2 and 3)	1	1
1	101564807	Assembly, Seat Bottom – Gray (includes items 2 and 3)	1	1
1	101564808	Assembly, Seat Bottom – Black (includes items 2 and 3)	1	1
2	101562701	Cover, Vinyl Seat Bottom – Buff	1	1
2	101562702	Cover, Vinyl Seat Bottom – White	1	1
2	101562704	Cover, Vinyl Seat Bottom – Black	1	1
2	101562710	Cover, Vinyl Seat Bottom – Gray	1	1
3	1010543	Insert, Wood	7	7
4	8251	Screw, Phillips Truss-Head, 1/4-20 x 1	5	5
5	1011578	Washer, Flat, 5/16	3	3
6	1011210	Support, Seat	1	1
7	8304	Washer, Internal Tooth Lock, 1/4	5	5
8	451	Washer, Lock, 1/4	4	4
9	304	Screw, Hex-Head Cap, 1/4-20 x 3/4	4	4
10	101677701	Assembly, Seat Back – White	1	1
10	101677702	Assembly, Seat Back – Black	1	1
10	101677703	Assembly, Seat Back – Buff	1	1
10	101677705	Assembly, Seat Back – Gray	1	1
11	101675501	Cover, Vinyl Seat Back – Buff	1	1
11	101675502	Cover, Vinyl Seat Back – White	1	1
11	101675504	Cover, Vinyl Seat Back – Black	1	1
11	101675506	Cover, Vinyl Seat Back – Gray	1	1
12	1016751	Cap, Seat Back	1	1
13	1011389	Bumper, Rubber (package of 5)	1	1
14	1011219	Assembly, Hinge (includes items 15 - 21)	1	1
15	1011221	Hinge, Short	2	2
16	1015091	Nut, Centerlock Cap, 1/4-20 x 1/4	2	2
17	1010695	Washer, Curved Spring, 1/4	2	2
18	8028	Bushing, Nylon	6	6
19	332	Washer, Flat, 1/4	2	2
20	1011222	Pin, Hinge, Long	1	1
21	1011220	Hinge, Long	1	1
22	7473	Nut, Nylon Lock, 5/16-18	2	2
23	1241	Washer, Flat, 5/16	6	6
24	1218	Screw, Hex-Head Cap, 5/16-18 x 1-1/4	2	2
25	1017774	Spacer, Body	4	4
26	101910401	Screw, Thread-Forming, 5/16-18 x 1-1/4	4	4
27	1014007	Washer, Lock, 1/4	2	2
28	1016916	Screw, Hex-Head Cap with Nylon Patch, 1/4-20 x 1-1/2	2	2
29	332	Washer, Flat, 1/4	4	4

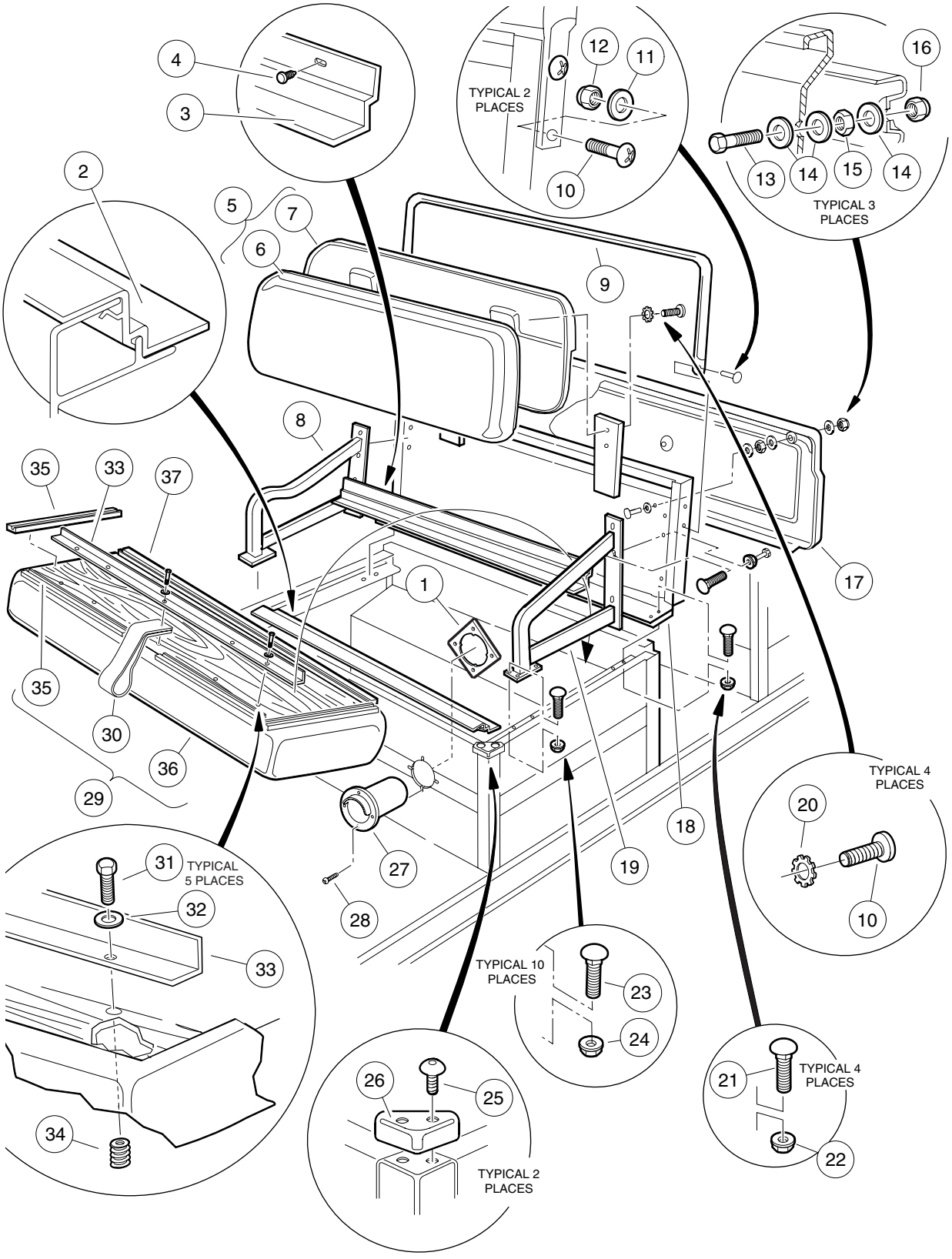
TYPICAL 2 PLACES
TYPICAL 3 PLACES
TYPICAL 4 PLACES
TYPICAL 5 PLACES
TYPICAL 10 PLACES
TYPICAL 4 PLACES
TYPICAL 2 PLACES

FIRST SEAT AND SUPPORT STRUCTURE – TRANSPORTER 4 AND TRANSPORTER 6

ITEM	PART NO.	DESCRIPTION	QTY GAS	QTY ELEC
		1 2 3 4		
1	101801001	Plate, Receptacle Backing (electric vehicle only)		1
2	101964001	Trim, Seat Bottom, Front	1	1
3	101963901	Trim, Seat Bottom, Rear	1	1
4	1010434	Barrel, Plastic	5	5
5	101677701	Assembly, Seat Back – White (includes items 6 and 7)	1	1
5	101677702	Assembly, Seat Back – Black (includes items 6 and 7)	1	1
5	101677705	Assembly, Seat Back – Gray (includes items 6 and 7)	1	1
6	101675502	Cover, Vinyl Seat Back – White	1	1
6	101675504	Cover, Vinyl Seat Back – Black	1	1
6	101675506	Cover, Vinyl Seat Back – Gray	1	1
7	1016751	Cap, Seat Back	1	1
8	101888501	Assembly, Passenger Armrest	1	1
9	1016670	Handrail	1	1
10	8251	Screw, Phillips Truss-Head, 1/4-20 x 1	8	8
11	332	Washer, Flat, 1/4	4	4
12	8233	Nut, Nylon Lock, 1/4-20	4	4
13	1010934	Screw, Hex-Head Cap, 5/16-18 x 1	3	3
14	1241	Washer, Flat, 5/16	9	9
15	1242	Nut, Hex, 5/16-18	3	3
16	7473	Nut, Nylon Lock, 5/16-18	3	3
17	1016970	Cover, Seat Back Support	1	1
18	1016723	Assembly, Seat Support Panel	1	1
19	101888502	Armrest, Driver	1	1
20	101946201	Washer, External Tooth Lock, 1/4	4	4
21	101963301	Bolt, Carriage, 5/16-18 x 3/4	4	4
22	101963401	Nut, Flange, 5/16-18	4	4
23	101958601	Bolt, Carriage, 1/4-20 x 3/4	10	10
24	101835601	Nut, Flange, 1/4-20	10	10
25	1014321	Screw, Torx Truss-Head, #10-24 x 3/8	4	4
26	1014387	Cap, Corner	2	2
27	1016673	Housing, Cord (electric vehicle only)		1
28	8796	Screw, Phillips-Head, #7-19 x 3/4 (electric vehicle only)		4
29	101564502	Assembly, Seat Bottom – White (includes items 30 - 37)	1	1
29	101564503	Assembly, Seat Bottom – Black (includes items 30 - 37)	1	1
29	101564505	Assembly, Seat Bottom – Gray (includes items 30 - 37)	1	1
30	1013309	Strap, Seat Bottom	1	1
31	101954301	Screw, Hex-Head Cap (with adhesive patch), 1/4-20 x 3/4	5	5
32	332	Washer, Flat, 1/4	5	5
33	101894303	Stiffener, Seat	1	1
34	1010543	Insert, Wood	5	5
35	1013311	Bumper, Seat, Short	4	4
36	101562702	Cover, Vinyl Seat Bottom – White	1	1
36	101562704	Cover, Vinyl Seat Bottom – Black	1	1
36	101562710	Cover, Vinyl Seat Bottom – Gray	1	1
37	1013312	Bumper, Seat, Long	1	1

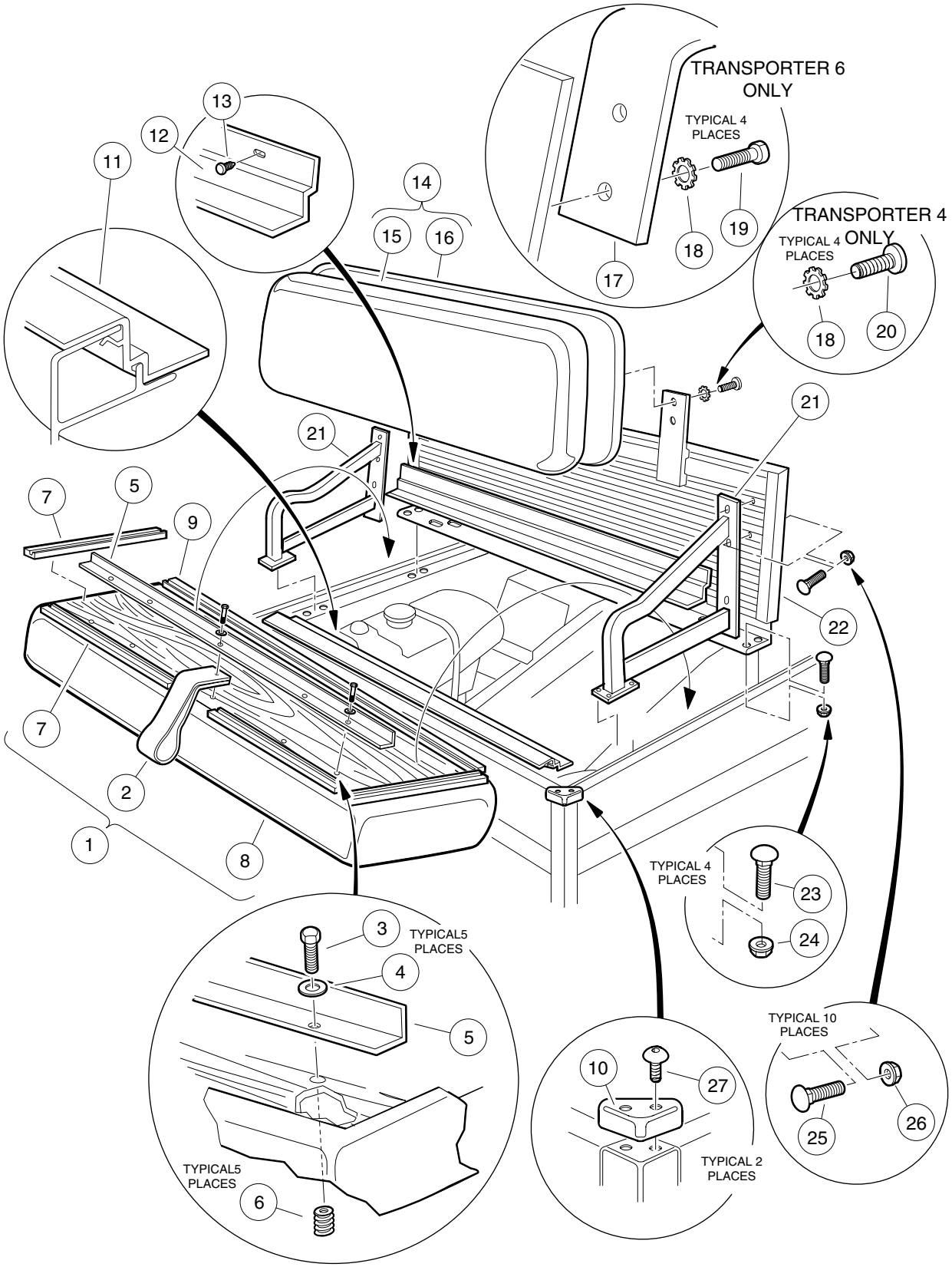
TRANSPORTER 6 ONLY
TYPICAL 4 PLACES
TRANSPORTER 4 ONLY
TYPICAL 4 PLACES
TYPICAL 4 PLACES
TYPICAL5 PLACES
TYPICAL5 PLACES
TYPICAL 10 PLACES
TYPICAL 2 PLACES
1
2
3
4
5
6
7
8
9
10
11
12
13
14
15
16
17
18
19
20
21
22
23
24
25
26
27

SECOND SEAT AND SUPPORT STRUCTURE – TRANSPORTER 4 AND TRANSPORTER 6

ITEM	PART NO.	DESCRIPTION	QTY GAS	QTY ELEC
		1 2 3 4		
1	101564502	Assembly, Seat Bottom – White (includes items 2 - 9)	1	1
1	101564503	Assembly, Seat Bottom – Black (includes items 2 - 9)	1	1
1	101564505	Assembly, Seat Bottom – Gray (includes items 2 - 9)	1	1
2	1013309	Strap, Seat Bottom	1	1
3	101954301	Screw, Hex-Head Cap (with adhesive patch), 1/4-20 x 3/4	5	5
4	332	Washer, Flat, 1/4	5	5
5	101894303	Stiffener, Seat	1	1
6	1010543	Insert, Wood	5	5
7	1013311	Bumper, Seat – Short	4	4
8	101562702	Cover, Vinyl Seat Bottom – White	1	1
8	101562704	Cover, Vinyl Seat Bottom – Black	1	1
8	101562710	Cover, Vinyl Seat Bottom – Gray	1	1
9	1013312	Bumper, Seat, Long	1	1
10	1014387	Cap, Corner	2	2
11	101964001	Trim, Seat Bottom, Front	1	1
12	101963901	Trim, Seat Bottom, Rear	1	1
13	1010434	Barrel, Plastic	5	5
14	101677701	Assembly, Seat Back – White (includes items 15 and 16)	1	1
14	101677702	Assembly, Seat Back – Black (includes items 15 and 16)	1	1
14	101677705	Assembly, Seat Back – Gray (includes items 15 and 16)	1	1
15	101675502	Cover, Vinyl Seat Back – White	1	1
15	101675504	Cover, Vinyl Seat Back – Black	1	1
15	101675506	Cover, Vinyl Seat Back – Gray	1	1
16	1016751	Cap, Seat Back	1	1
17	1016839	Mount, Seat Back Bracket (TransPorter 6 only)	2	2
18	101946201	Washer, External Tooth Lock, 1/4	4	4
19	7479	Screw, Hex-Head Cap, 1/4-20 x 1-1/4 (TransPorter 6 only)	4	4
20	8251	Screw, Phillips Truss-Head, 1/4-20 x 1 (TransPorter 4 only)	4	4
21	101888501	Assembly, Armrest, Passenger (TransPorter 4 only)	2	2
22	1016723	Assembly, Seat Support Panel	1	1
23	101963301	Bolt, Carriage, 5/16-18 x 3/4	4	4
24	101963401	Nut, Flange, 5/16-18	4	4
25	101958601	Bolt, Carriage, 1/4-20 x 3/4 (TransPorter 4 only)	10	10
26	101835601	Nut, Flange, 1/4-20 (TransPorter 4 only)	10	10
27	1014321	Screw, Torx Truss-Head, #10-24 x 3/8	4	4

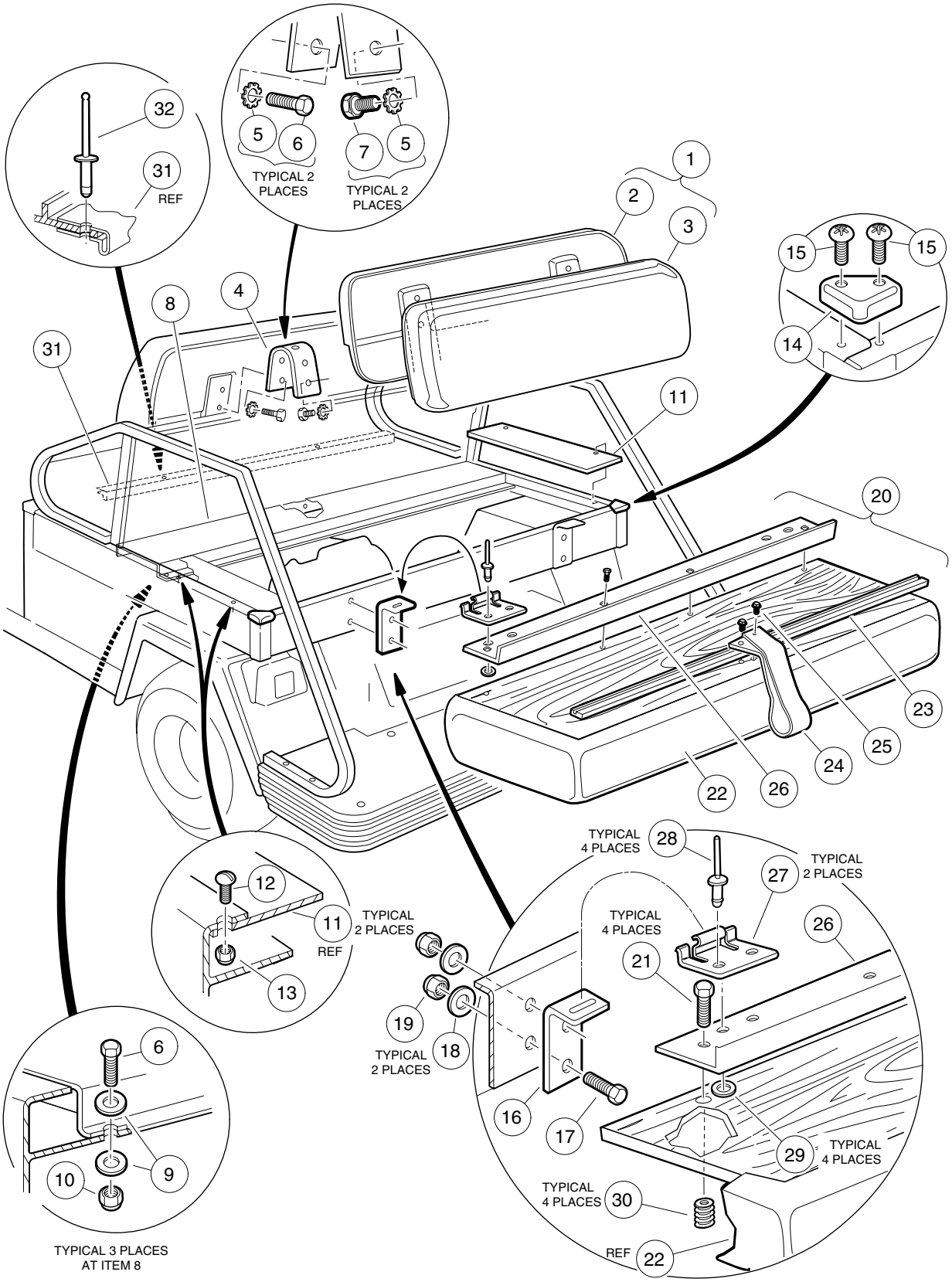
32
31
REF
5
6
TYPICAL 2 PLACES
7
5
TYPICAL 2 PLACES
1
2
3
15
15
14
8
4
31
11
20
23
25
24
22
26
12
11
TYPICAL 2 PLACES
REF
13
TYPICAL 4 PLACES
28
27
TYPICAL 2 PLACES
TYPICAL 4 PLACES
26
21
19
TYPICAL 2 PLACES
18
16
17
29
TYPICAL 4 PLACES
TYPICAL 4 PLACES
30
REF
22
6
10
9
TYPICAL 3 PLACES AT ITEM 8

THIRD SEAT AND COMPONENTS – TRANSPORTER 6

ITEM	PART NO.	DESCRIPTION	QTY GAS	QTY ELEC
		1 2 3 4		
1	101677701	Assembly, Seat Back – White (includes items 2 and 3)	1	1
1	101677702	Assembly, Seat Back – Black (includes items 2 and 3)	1	1
1	101677705	Assembly, Seat Back – Gray (includes items 2 and 3)	1	1
2	1016751	Cap, Seat Back	1	1
3	101675502	Cover, Vinyl Seat Back – White	1	1
3	101675504	Cover, Vinyl Seat Back – Black	1	1
3	101675505	Cover, Vinyl Seat Back – Gray	1	1
4	1016839	Bracket, Seat Back Mounting	2	2
5	101946201	Washer, External Tooth Lock, 1/4	8	8
6	7847	Screw, Hex-Head Cap, 1/4-20 x 3/4	7	7
7	7479	Screw, Hex-Head Cap, 1/4-20 x 1-1/4	4	4
8	1016816	Support, Rear Seat	1	1
9	332	Washer, Flat, 1/4	6	6
10	8233	Nut, Nylon Lock, 1/4-20	3	3
11	1016930	Panel, Rear Seat Frame	2	2
12	1013169	Screw, Round-Head Slotted Machine, #10-32 x 1/2	4	4
13	1013061	Nut, Nylon Lock, #10-32	4	4
14	1014387	Cap, Corner	2	2
15	1014321	Screw, Torx Truss-Head, #10-24 x 3/8	4	4
16	1016819	Hinge, Seat	2	2
17	8861	Screw, Hex-Head Cap, 3/8-16 x 1-3/4	4	4
18	1011990	Washer, Flat, 3/8	4	4
19	8754	Nut, Nylon Lock, 3/8-16	4	4
20	101684102	Assembly, Seat Bottom, White (includes items 21 - 30)	1	1
20	101684103	Assembly, Seat Bottom, Black (includes items 21 - 30)	1	1
20	101684105	Assembly, Seat Bottom, Gray (includes items 21 - 30)	1	1
21	101954301	Screw, Hex-Head Cap (with adhesive patch), 1/4-20 x 3/4	4	4
22	101562702	Cover, Vinyl Seat Bottom – White	1	1
22	101562704	Cover, Vinyl Seat Bottom – Black	1	1
22	101562710	Cover, Vinyl Seat Bottom – Gray	1	1
23	1013312	Bumper, Long Seat	1	1
24	1013309	Strap, Seat Bottom	1	1
25	1010545	Screw, Hex-Washer-Head, 1/4-14 x 3/4	2	2
26	1016824	Angle, Seat Hinge	1	1
27	1011652	Plate, Seat Hinge	2	2
28	101880901	Rivet, Pop, Stainless Steel, 3/16	4	4
29	101881701	Washer, Flat, Stainless Steel, #8	4	4
30	1010543	Insert, Wood	4	4
31	101837001	Insulator, Battery (electric vehicle only)		1
32	1013357	Rivet, Pop (electric vehicle only)		2

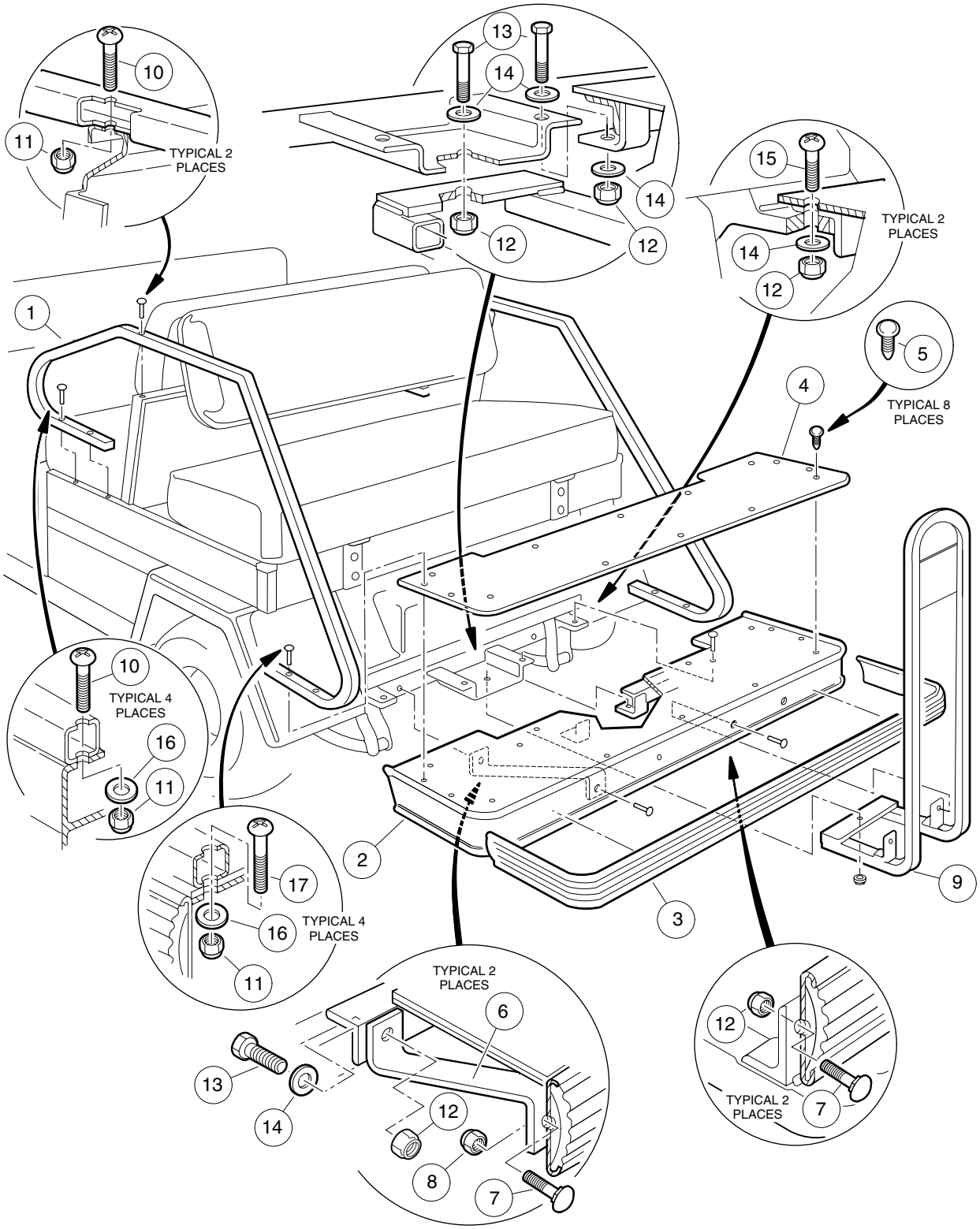
10
11
TYPICAL 2 PLACES
13
14
12
15
TYPICAL 2 PLACES
1
5
TYPICAL 8 PLACES
4
10
TYPICAL 4 PLACES
16
11
17
TYPICAL 4 PLACES
2
3
9
TYPICAL 2 PLACES
6
13
14
12
8
7
12
TYPICAL 2 PLACES
7

REAR FOOTREST AND HANDRAILS – TRANSPORTER 6

ITEM	PART NO.	DESCRIPTION	QTY GAS	QTY ELEC
		1 2 3 4		
1	101846301	Armrest, Rear Seat	2	2
2	1016843	Assembly, Rear Footrest (includes items 3 - 8)	1	1
3	101347505	Guard, Bumper	1	1
4	1016838	Mat, Footrest	1	1
5	1010434	Fastener, Plastic Barrel	8	8
6	1016668	Bar, Connecting	2	2
7	1010435	Bolt, Carriage, 5/16-18 x 1	4	4
8	7473	Nut, Nylon Lock, 5/16-18	2	2
9	1016842	Handrail, Rear Seat	1	1
10	8418	Screw, Phillips Truss-Head, 1/4-20 x 1-1/2	6	6
11	8233	Nut, Nylon Lock, 1/4-20	10	10
12	7473	Nut, Nylon Lock, 5/16-18	8	8
13	1218	Screw, Hex-Head Cap, 5/16-18 x 1-1/4	7	7
14	1241	Washer, Flat, 5/16	9	9
15	7410	Screw, Phillips Truss-Head, 5/16-18 x 1-1/4	2	2
16	332	Washer, Flat, 1/4	8	8
17	1011988	Screw, Phillips Truss-Head, 1/4-20 x 2	4	4

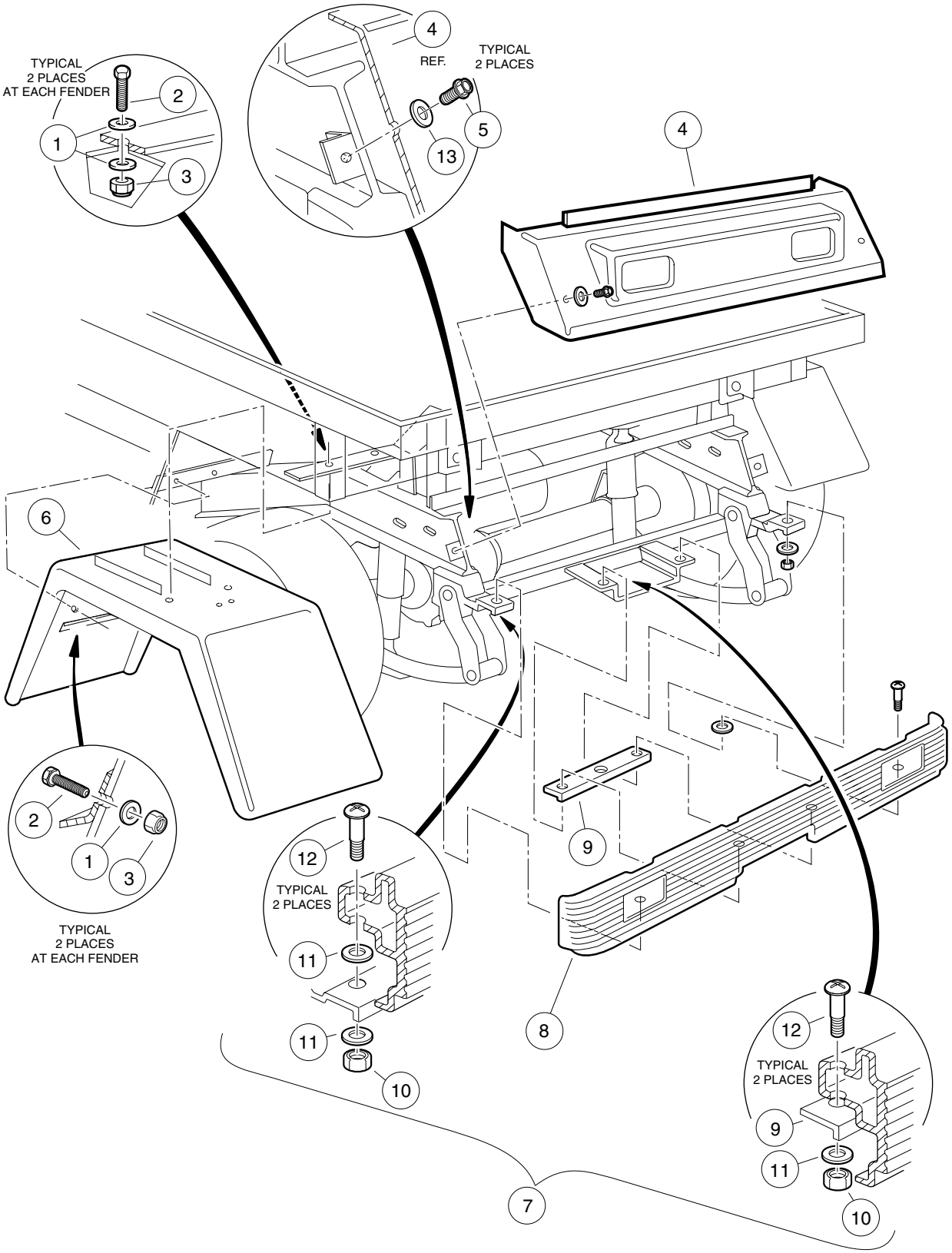
TYPICAL
2 PLACES
AT EACH FENDER
2
1
3
4
REF.
TYPICAL
2 PLACES
5
13
4
6
2
1
3
TYPICAL
2 PLACES
AT EACH FENDER
12
TYPICAL
2 PLACES
11
11
10
9
8
12
TYPICAL
2 PLACES
9
11
10
7

REAR BODY TRIM – TRANSPORTER 4 AND TRANSPORTER 6

ITEM	PART NO.	DESCRIPTION	QTY GAS	QTY ELEC
		1 2 3 4		
1	1014306	Washer, Flat, 1/4	12	12
2	304	Screw, Hex-Head Cap, 1/4-20 x 1	8	8
3	8233	Nut, Nylon Lock, 1/4-20	8	8
4	1015530	Tailskirt	1	1
5	1012285	Screw, Thread-Rolling, 1/4-20 x 5/8	2	2
6	1016679	Fender, Rear	2	2
7	1017079	Kit, Rear Bumper (includes items 8 - 12) (TransPorter 4 only)	1	1
8	1016379	Bumper, Rear	1	1
9	1016875	Plate, Mounting, Long	1	1
10	7473	Nut, Nylon Lock, 5/16-18	4	4
11	1011697	Washer, Flat, 5/16	6	6
12	1016876	Bolt, Phillips Truss-Head Shoulder, 3/8-18 x 2	4	4
13	332	Washer, Flat, 1/4	2	2

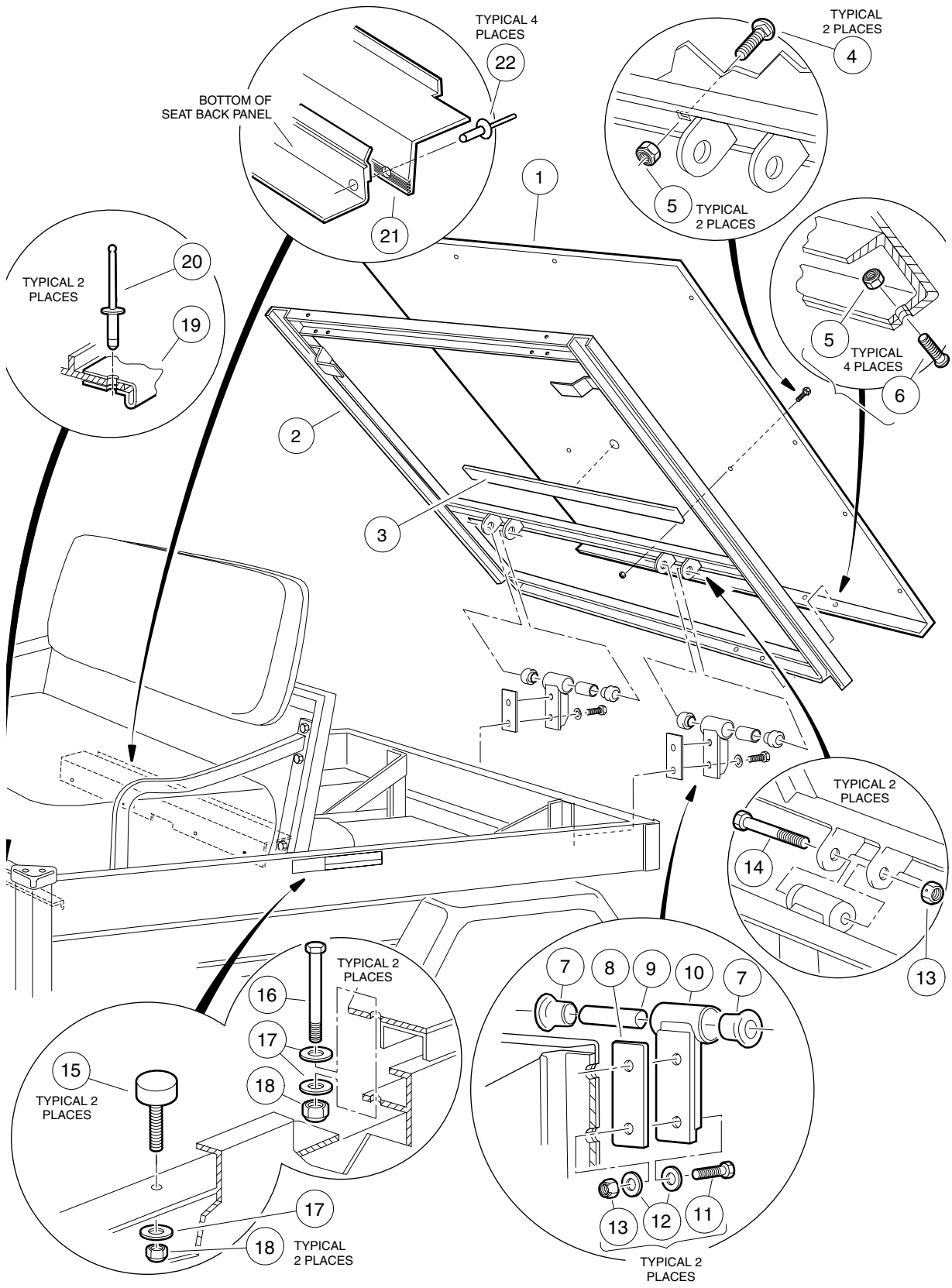
TYPICAL 4 PLACES
22
BOTTOM OF SEAT BACK PANEL
21
1
TYPICAL 2 PLACES
4
5
TYPICAL 2 PLACES
20
TYPICAL 2 PLACES
19
5
TYPICAL 4 PLACES
6
2
3
TYPICAL 2 PLACES
14
13
TYPICAL 2 PLACES
16
17
18
15
TYPICAL 2 PLACES
17
18
TYPICAL 2 PLACES
7
8
9
10
7
13
12
11
TYPICAL 2 PLACES

REAR CARGO BED – TRANSPORTER 4

ITEM	PART NO.	DESCRIPTION	QTY GAS	QTY ELEC
		1 2 3 4		
1	1016724	Assembly, Tilt Bed (includes items 2 - 6)	1	1
2	N/A	Weldment, Tilt Bed	1	1
3	1014471	Insulation	A/R	A/R
4	1010435	Bolt, Carriage, 5/16-18 x 1	2	2
5	7473	Nut, Nylon Lock, 5/16-18	6	6
6	1015399	Screw, Torx Truss-Head, 5/16-18 x 3/4	4	4
7	1015583	Bushing, Urethane	4	4
8	1015507	Shim, Tilt Bed Pivot	A/R	A/R
9	1012303	Bushing, Steel	2	2
10	1015356	Weldment, Tilt Bed Hinge	2	2
11	705	Screw, Hex-Head Cap, 3/8-16 x 1-1/4	4	4
12	1011990	Washer, Flat, 3/8	8	8
13	8754	Nut, Nylon Lock, 3/8-16	6	6
14	8755	Screw, Hex-Head Cap, 3/8-16 x 3-3/8	2	2
15	1010878	Bumper, Rubber	2	2
16	1013872	Screw, Hex-Head Cap, 1/4-20 x 4	2	2
17	332	Washer, Flat, 1/4	6	6
18	8233	Nut, Nylon Lock, 1/4-20	4	4
19	101837001	Insulator, Battery (electric vehicle only)		1
20	1013357	Rivet, Aluminum Pop, 5/32 (electric vehicle only)		2
21	1017976	Seal, Bed	1	1
22	7532	Rivet, Pop, 3/16	4	4

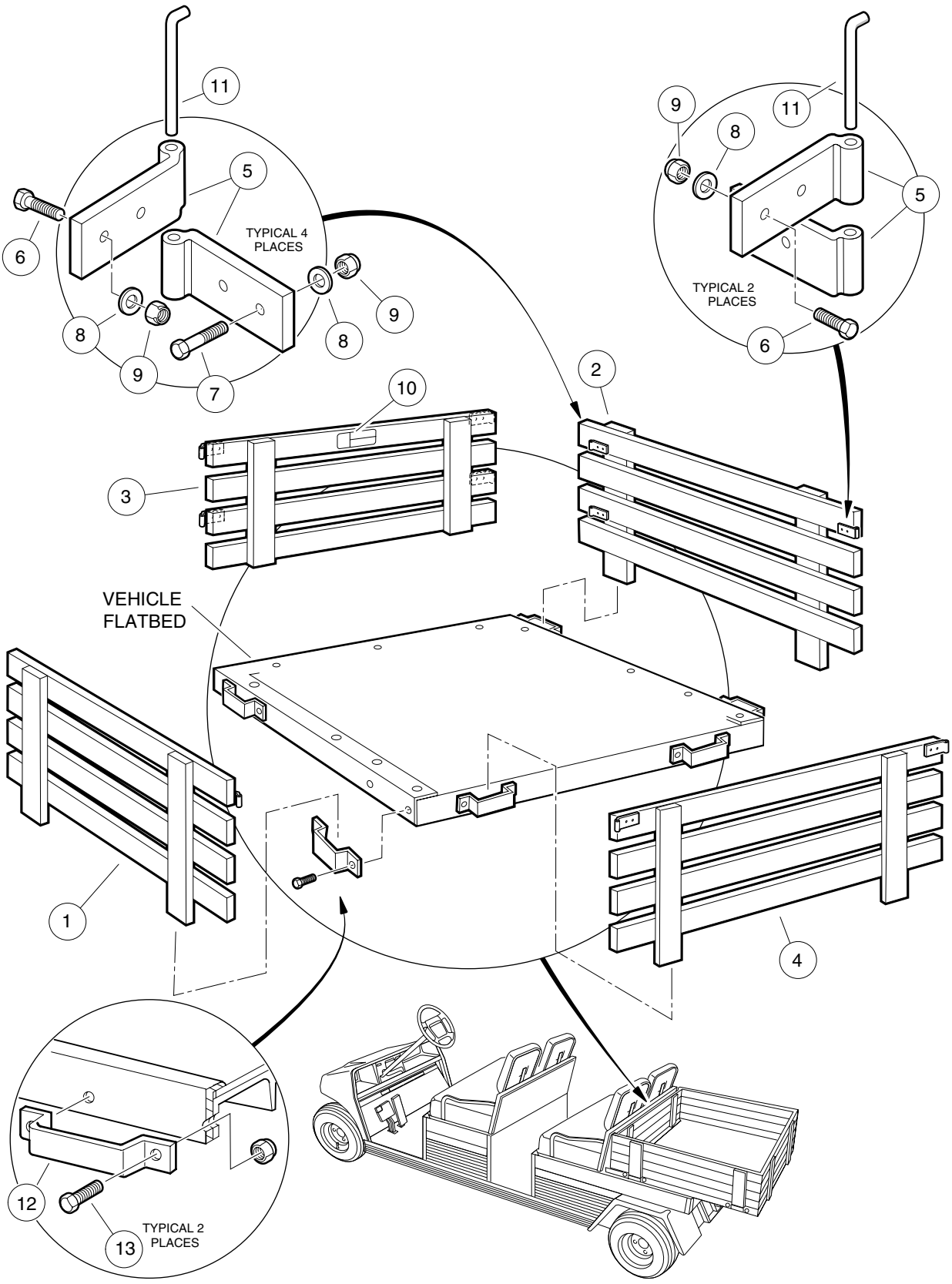
11
5
6
TYPICAL 4
PLACES
8
9
7
8
9
11
9
8
5
TYPICAL 2
PLACES
6
10
2
3
VEHICLE
FLATBED
1
4
12
13
TYPICAL 2
PLACES

STAKE SIDE – TRANSPORTER 4

ITEM	PART NO.	DESCRIPTION	QTY GAS	QTY ELEC
		1 2 3 4		
	1015660	Kit, Stake Side (includes items 1 - 13)	1	1
1	N/A	Stake Side Assembly, Driver-Side (includes items 5 - 9)	1	1
2	N/A	Stake Side Assembly, Passenger-Side (includes items 5 - 9)	1	1
3	N/A	Stake Side Assembly, Front (includes items 5 - 9)	1	1
4	N/A	Stake Side Assembly, Rear (includes items 5 - 10)	1	1
5	1015654	Hinge, Stake Side	12	12
6	7479	Screw, Hex-Head Cap, 1/4-20 x 1-1/4	18	18
7	7311	Screw, Hex-Head Cap, 1/4-20 x 2	6	6
8	332	Washer, Flat, 1/4	24	24
9	1108	Nut, Dimped Lock, 1/4-20	24	24
10	1015539	Decal, Bed Load	1	1
11	1015656	Pin, Stake Side Hinge	6	6
12	1016077	Bracket, Stake Side	5	5
13	1010934	Screw, Hex-Head Cap, 5/16-18 x 1	10	10

1
G
E

WHEELS AND TIRES

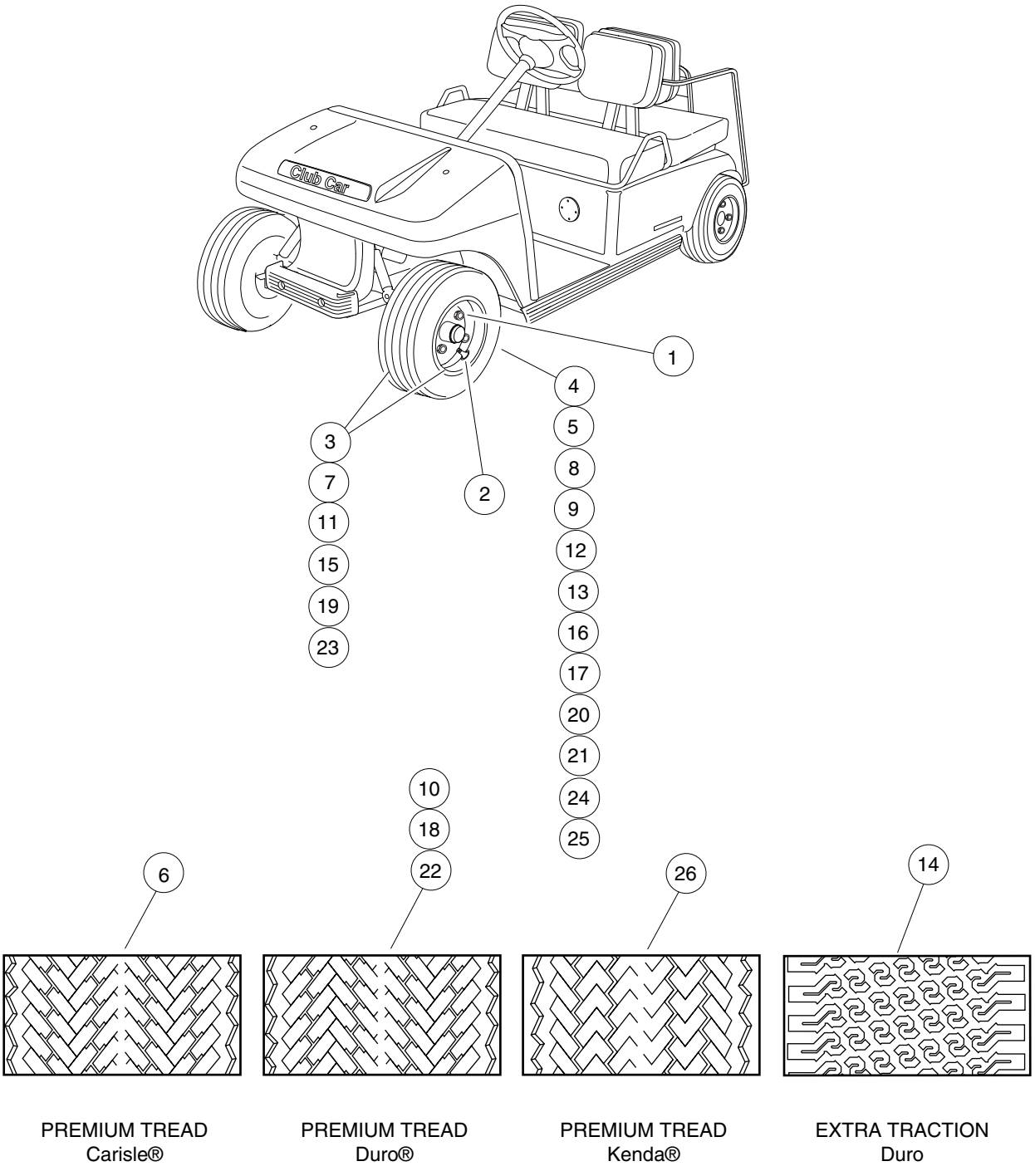
Club Car
1
4
5
8
9
12
13
16
17
20
21
24
25
3
7
11
15
19
23
2
10
18
22
6
26
14
PREMIUM TREAD
Carisle®
PREMIUM TREAD
Duro®
PREMIUM TREAD
Kenda®
EXTRA TRACTION
Duro

ITEM	PART NO.	DESCRIPTION	QTY GAS	QTY ELEC
		1 2 3 4		
1	1010984	Nut, Lug	16	16
2	7310	Stem, Valve*	4	4
3	101570502	Assembly, Beige Wheel and Premium Tire (includes items 4 and 6)	4	4
3	101651402	Assembly, White Wheel and Premium Tire (includes items 5 and 6)	4	4
4	1015707	Wheel Rim – Beige	1	1
5	1014771	Wheel Rim – White	1	1
6	101567202	Tire, Unmounted, Premium Tread, 4-Ply Rated (18 x 8.50 - 8) (Carlisle®)	1	
7	101570506	Assembly, Beige Wheel and Premium Tire (includes items 8 and 10)	4	
7	101651406	Assembly, White Wheel and Premium Tire (includes items 9 and 10)	4	
8	1015707	Wheel Rim – Beige	1	
9	1014771	Wheel Rim – White	1	
10	101737002	Tire, Unmounted, Premium Tread, 6-Ply Rated (18.5 x 8.50 - 8) (Duro®)	1	
11	101570507	Assembly, Beige Wheel and Extra Traction Tire (includes items 12 and 14)	4	
11	101651407	Assembly, White Wheel and Extra Traction Tire (includes items 13 and 14)	4	
12	1015707	Wheel Rim – Beige	1	
13	1014771	Wheel Rim – White	1	
14	101769302	Tire, Unmounted, Extra Traction Tread, 6-Ply Rated (18.5 x 8.50 - 8) (Duro)	1	
15	101570509	Assembly, Beige Wheel and Premium Tire (includes items 16 and 18)	4	
15	101651409	Assembly, White Wheel and Premium Tire (includes items 17 and 18)	4	
16	101918401	Wheel Rim – Beige	1	
17	101918402	Wheel Rim – White	1	
18	101884901	Tire, Unmounted, Premium Tread, 6-Ply Rated (18.5 x 6.50 - 8) (Duro)	1	
19	101570512	Assembly, Beige Wheel and Premium Tire (includes items 20 and 22)	4	4
19	101651412	Assembly, White Wheel and Premium Tire (includes items 21 and 22)	4	4
20	1015707	Wheel Rim – Beige	1	1
21	1014771	Wheel Rim – White	1	1
22	****	Tire, Unmounted, Premium Tread, 4-Ply Rated (18 x 8.50 - 8) (Duro)	1	1
23	101570513	Assembly, Beige Wheel and Premium Tire (includes items 24 and 26)	4	4
23	101651413	Assembly, White Wheel and Premium Tire (includes items 25 and 26)	4	4
24	1015707	Wheel Rim – Beige	1	1
25	1014771	Wheel Rim – White	1	1
26	AM10682	Tire, Unmounted, Premium Tread, 4-Ply Rated (18 x 8.50 - 8) (Kenda®)	1	1

**** Special order item available upon request.

* Item 2 is part of all wheel assemblies.

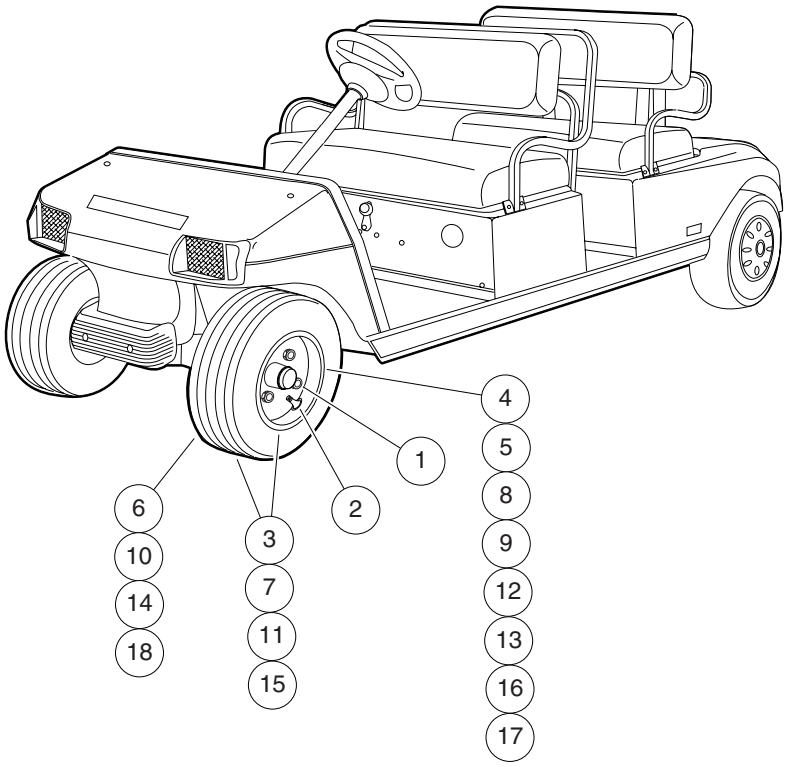

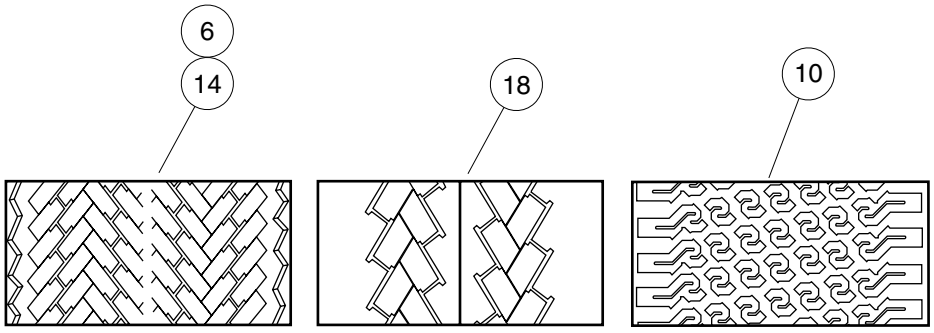

PREMIUM TREAD
Duro®

HF 232
Duro

EXTRA TRACTION
Duro

WHEELS AND TIRES – VILLAGER 6, VILLAGER 8, TRANSPORTER 4, AND TRANSPORTER 6

ITEM	PART NO.	DESCRIPTION	QTY GAS	QTY ELEC
		1 2 3 4		
1	1010984	Nut, Lug	16	16
2	7310	Stem, Valve*	4	4
3	101570506	Assembly, Beige Wheel and Premium Tire (includes items 4 and 6)	4	4
3	101651406	Assembly, White Wheel and Premium Tire (includes items 5 and 6)	4	4
4	1015707	Wheel Rim – Beige	1	1
5	1014771	Wheel Rim – White	1	1
6	101737002	Tire, Unmounted, Premium Tread, 6-Ply Rated (18 x 8.50 - 8) (Duro)	1	1
7	101570507	Assembly, Beige Wheel and Extra Traction Tire (includes items 8 and 10)	4	4
7	101651407	Assembly, White Wheel and Extra Traction Tire (includes items 9 and 10)	4	4
8	1015707	Wheel Rim – Beige	1	1
9	1014771	Wheel Rim – White	1	1
10	101769302	Tire, Unmounted, Extra Traction, 6-Ply Rated (18 x 8.50 - 8) (Duro)	1	1
11	101570509	Assembly, Beige Wheel and Premium Tire (Villager vehicles – front only) (includes items 12 and 14)	4	4
11	101651409	Assembly, White Wheel and Premium Tire (Villager vehicles – front only) (includes items 13 and 14)	4	4
12	101918401	Wheel Rim – Beige	1	1
13	101918402	Wheel Rim – White	1	1
14	101884901	Tire, Unmounted, Premium Tread, 6-Ply Rated (18 x 6.50 - 8) (Duro)	1	1
15	101570514	Assembly, Beige Wheel and Tire, HF232 (includes items 16 and 18)	4	4
15	101651414	Assembly, White Wheel and Tire, HF232 (includes items 17 and 18)	4	4
16	1015707	Wheel Rim – Beige	1	1
17	1014771	Wheel Rim – White	1	1
18	****	Tire, Unmounted, HF232, 6-Ply Rated (18.5 x 8.5 - 8) (Duro)	1	1
	****	Special order item available upon request.		
		* Item 2 is part of all wheel assemblies.		

2
G
E

DECALS

OPERATING INSTRUCTIONS

- Read Owner's Manual and safety warnings located on dash panel prior to driving.
- Study and understand controls.
- Make sure wheels are turned in desired direction.
- Turn key to "ON" position and be sure nothing is in your path.
- While vehicle is stopped, select direction by placing shift lever or switch in desired position:

F – Forward N – Neutral R – Reverse (Buzzer will sound)

- Vehicle will start moving when accelerator pedal is depressed.
- Slowly depress accelerator pedal to increase speed. Park brake will release when accelerator pedal is depressed.
- To stop, release accelerator pedal and depress brake pedal.
- After stopping the vehicle:
  - Firmly depress park brake until it locks.
  - Place Forward/Reverse switch in "NEUTRAL" position.
  - Turn key "OFF" and remove key when not in use.

CCI 101621601

⚠ WARNING

ROLLOVER OR FALLING OFF MAY CAUSE DEATH.

- Before using vehicle, read operating instructions.
- Remain seated and hold on to seat handle while moving.
- Do not start vehicle until all occupants are seated.
- Two (2) persons per seat maximum.
- Operate from driver side only and not on public roads.
- Keep entire body inside vehicle while moving.
- Drive slowly in turns and straight up and down slopes.
- Do not leave children unattended on vehicle.
- Never operate under the influence of alcohol or drugs.
- Use brakes to reduce speed when coasting downhill.
- Never stand in front of or behind vehicle.

CCI 1019606-01

IMPORTANT NOTICE

- Maximum vehicle speed is limited by motor braking during downhill operation with accelerator pedal depressed.
- If motor brake enabled, vehicle motor will brake when accelerator pedal is released.
- Beeping alarm indicates reduction in motor braking. Apply brakes to reduce speed.
- System is activated only when tow switch is in the "RUN" position.
- When towing vehicle, tow switch must be in the "TOW" position.

101959902

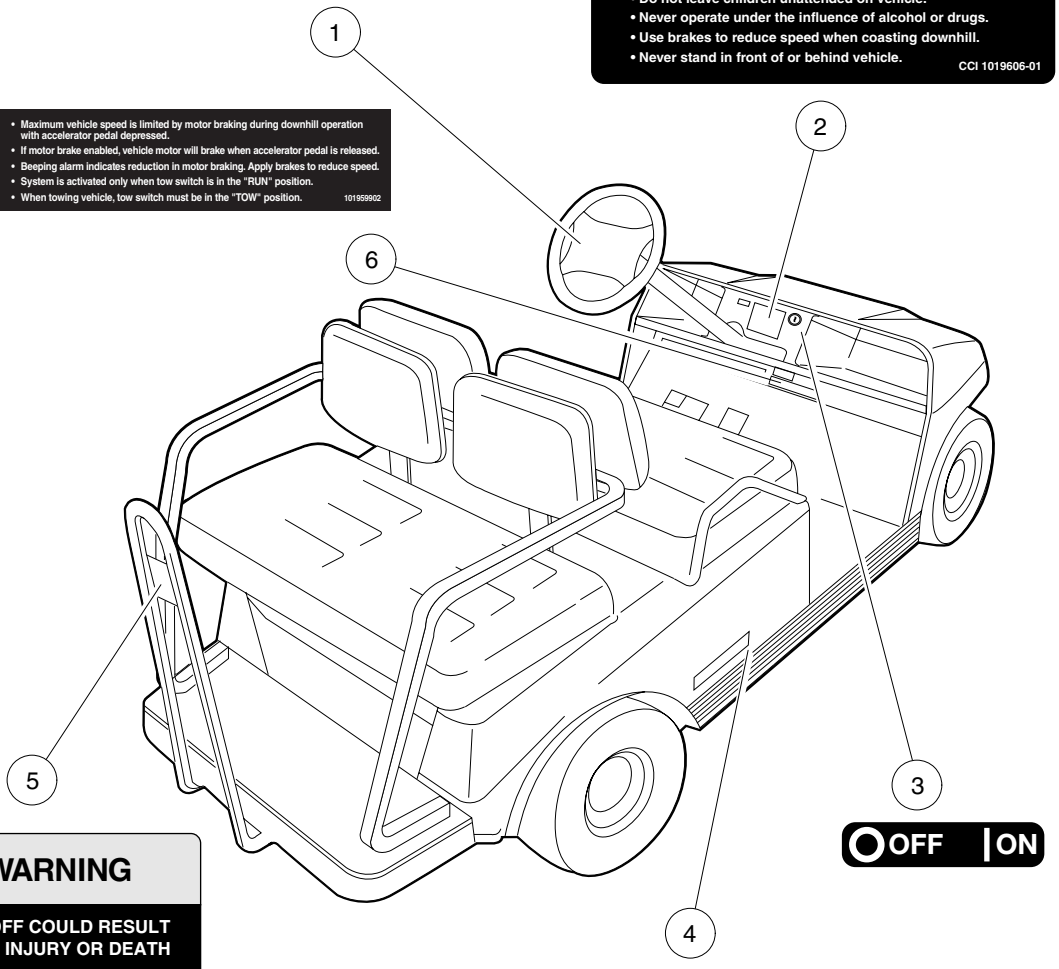

⚠ WARNING

FALLING OFF COULD RESULT IN SEVERE INJURY OR DEATH

- Remain seated with entire body inside vehicle and hold on to seat handle or handrail at all times.
- Two (2) persons per bench seat maximum.
- One (1) person per bucket seat maximum.
- Do not leave children unattended on vehicle at anytime.
- Never stand in front of or behind vehicle.

CCI 101705701

INGERSOLL-RAND

DECALS – VILLAGER 4

ITEM	PART NO.	DESCRIPTION	QTY GAS	QTY ELEC
		1 2 3 4		
1	101621601	Decal, Operating Instructions	1	1
2	101960601	Decal, Driver/Passenger Warning	1	1
3	101825101	Decal, Key Switch	1	1
4	101921901	Decal, Ingersoll-Rand (for 2001 vehicles only)	2	2
5	101705701	Decal, Passenger Warning	1	1
6	101959902	Decal, Motor Braking (IQ System vehicle only)		1

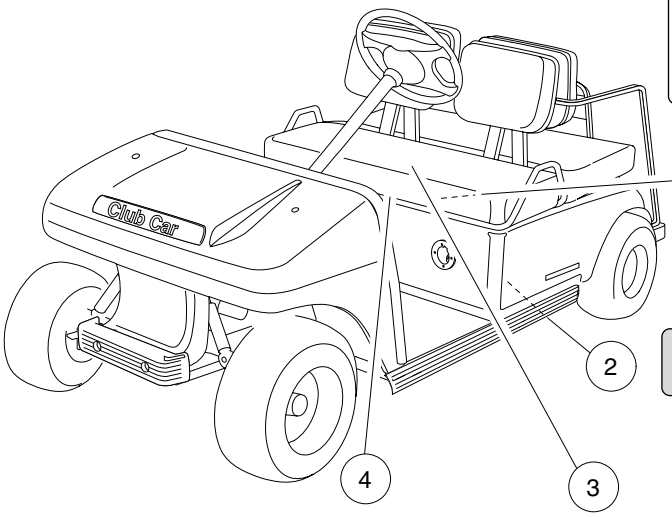

ELECTRIC VEHICLE

⚠ DANGER / POISON

EXPLOSIVE GASES CAN CAUSE BLINDNESS OR INJURY — SHIELD EYES — NO • SPARKS • FLAMES • SMOKING — SULFURIC ACID CAN CAUSE BLINDNESS OR SEVERE BURNS — FLUSH EYES IMMEDIATELY WITH WATER — GET MEDICAL HELP FAST

KEEP OUT OF THE REACH OF CHILDREN – DO NOT TIP – KEEP VENT CAPS TIGHT AND LEVEL

(MOLDED ON BATTERY CAPS)

NOTICE
- DO NOT OPERATE VEHICLE WITHOUT COVER IN PLACE.
- DO NOT DIRECT WATER STREAM AT THIS SWITCH.

CCI 1016109-01

(ON WIPER SWITCH COVER INSIDE BATTERY COMPARTMENT)

⚠ **WARNING** TOW RUN

Place Tow/Run switch in TOW position before:
- Disconnecting or connecting batteries
- Towing
- Extended storage
- Servicing

FAILURE TO HEED THIS WARNING COULD RESULT IN A BATTERY EXPLOSION OR SEVERE PERSONAL INJURY.

CCI 101908601

(ON TOW SWITCH BRACKET UNDER SEAT)

NOTICE

Do not operate vehicle without this cover properly installed.
Do not direct water stream in this area; will cause damage to components.
See vehicle maintenance and service manual before servicing. CCI 101931501

(ON SPEED CONTROLLER COVER)

⚠ **WARNING**

- GASOLINE EXPLOSION / FIRE.
- CAN CAUSE SEVERE INJURY OR DEATH.
- NO SMOKING, SPARKS, OR OPEN FLAME.
- STOP ENGINE. ALLOW TO COOL BEFORE REFUELING.
- TURN FUEL VALVE ( ) ON DURING OPERATION. ( ) OFF DURING STORAGE OR TRANSPORT.

CCI 1015476-01

(ON VEHICLE FRAME NEAR FUEL TANK)

⚠ **WARNING**

CAN CAUSE SEVERE INJURY

Rotating parts

HOT manifold & muffler

KEEP CLEAR CCI 1019605-01

(ON STARTER/GENERATOR AND ENGINE)

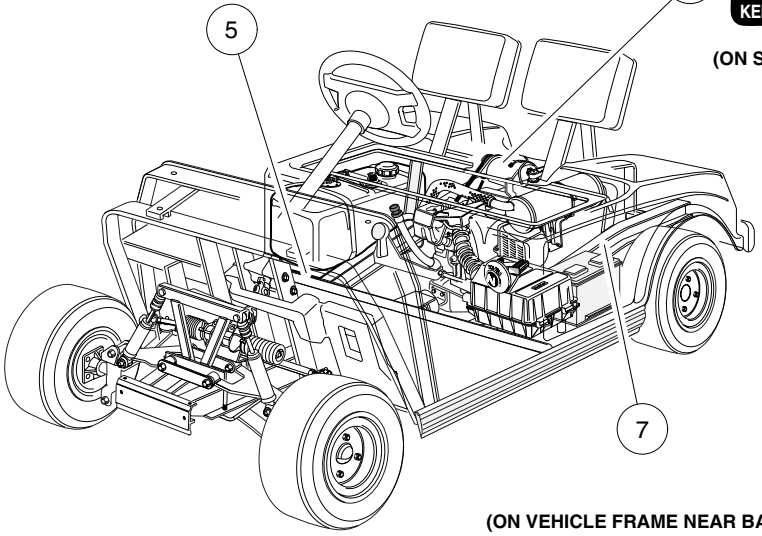

GASOLINE VEHICLE

(ON VEHICLE FRAME NEAR BATTERY)

⚠ **WARNING**

Negative frame ground. Can cause severe injury.
Do not contact positive (+) battery post or cable to frame.
Disconnect negative battery lead first.

⚠ **WARNING**

Excessive speed.
Can cause severe injury or death.
Do not tamper with engine governor adjustment.

CCI 1019152-01

DECALS – VILLAGER 4, CONTINUED

ITEM	PART NO.	DESCRIPTION	QTY GAS	QTY ELEC
		1 2 3 4		
1	1013677	Decal, Battery Danger		1
2	101610901	Decal, Potentiometer Caution (vehicles with serial numbers lower than 0112-001470)		1
3	101931501	Decal, Electrical Component Cover (IQ System vehicle only)		1
4	101908601	Decal, Tow/Run Switch (IQ System vehicle only)		1
5	101547601	Decal, Gasoline Warning	1	
6	101960501	Decal, Rotating Parts and Hot Manifold Warning	2	
7	101915201	Decal, Frame Ground and Governor Warning	1	

OPERATING INSTRUCTIONS

• Read Owner's Manual and safety warnings located on dash panel prior to driving.
• Study and understand controls.

TO START ENGINE
• Place shift lever in "N"– Neutral position.
• Depress brake pedal.
• Turn key switch to "START" position and release.

TO OPERATE VEHICLE
• Make sure wheels are turned in desired direction.
• Be sure nothing is in your path.
• While vehicle is stopped, and engine is at idle, select vehicle direction by placing shift lever or switch in desired position.
F – Forward N – Neutral R – Reverse (Buzzer will sound)
• Park brake will release when accelerator pedal is pushed.
• Slowly push accelerator pedal to increase speed.
• Engine must be at idle before moving shift lever.

TO STOP VEHICLE
• Release accelerator pedal and push brake pedal.
• After stopping, firmly push park brake until it locks.
• Turn key to "OFF" position, remove key and place shift lever in straight up neutral position when not in use.

CCI 101693201

OPERATING INSTRUCTIONS

• Read Owner's Manual and safety warnings located on dash panel prior to driving.
• Study and understand controls.
• Make sure wheels are turned in desired direction.
• Turn key to "ON" position and be sure nothing is in your path.
• While vehicle is stopped, select direction by placing shift lever or switch in desired position:
F – Forward N – Neutral R – Reverse (Buzzer will sound)
• Vehicle will start moving when accelerator pedal is depressed.
• Slowly depress accelerator pedal to increase speed. Park brake will release when accelerator pedal is depressed.
• To stop, release accelerator pedal and depress brake pedal.
• After stopping the vehicle:
- Firmly depress park brake until it locks.
- Place Forward/Reverse switch in "NEUTRAL" position.
- Turn key "OFF" and remove key when not in use.

CCI 101621601

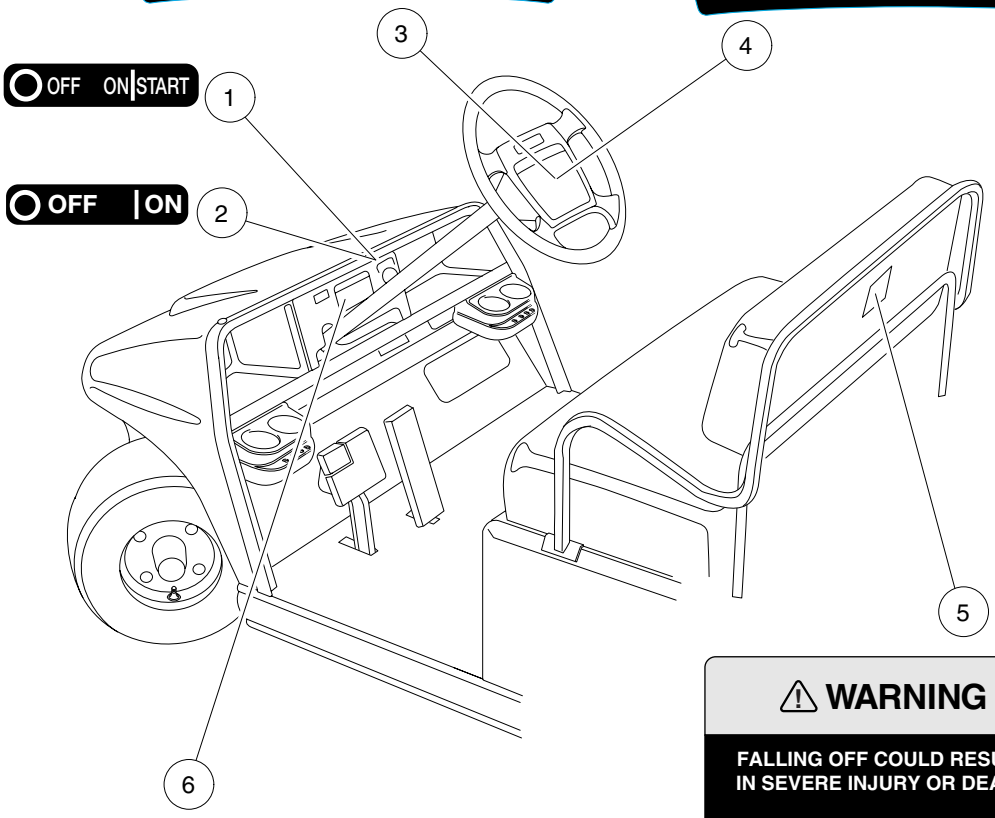

⚠ WARNING

ROLLOVER OR FALLING OFF MAY CAUSE DEATH.

• Before using vehicle, read operating instructions.
• Remain seated and hold on to seat handle while moving.
• Do not start vehicle until all occupants are seated.
• Two (2) persons per seat maximum.
• Operate from driver side only and not on public roads.
• Keep entire body inside vehicle while moving.
• Drive slowly in turns and straight up and down slopes.
• Do not leave children unattended on vehicle.
• Never operate under the influence of alcohol or drugs.
• Use brakes to reduce speed when coasting downhill.
• Never stand in front of or behind vehicle.

CCI 1019606-01

⚠ WARNING

FALLING OFF COULD RESULT IN SEVERE INJURY OR DEATH

• Remain seated with entire body inside vehicle and hold on to seat handle or handrail at all times.
• Two (2) persons per bench seat maximum.
• One (1) person per bucket seat maximum.
• Do not leave children unattended on vehicle at anytime.
• Never stand in front of or behind vehicle.

CCI 101705701

DECALS, FRONT BODY – VILLAGER 6 AND VILLAGER 8

ITEM	PART NO.	DESCRIPTION	QTY GAS	QTY ELEC
		1 2 3 4		
1	101825102	Decal, Key Switch (gasoline vehicle)	1	
2	101825101	Decal, Key Switch (electric vehicle)		1
3	101693201	Decal, Operating Instructions (gasoline vehicle)	1	
4	101621601	Decal, Operating Instructions (electric vehicle)		1
5	101705701	Decal, Passenger Warning	1	1
6	101960601	Decal, Driver/Passenger Warning	1	1

(MOLDED ON BATTERY CAPS)

ELECTRIC VEHICLE

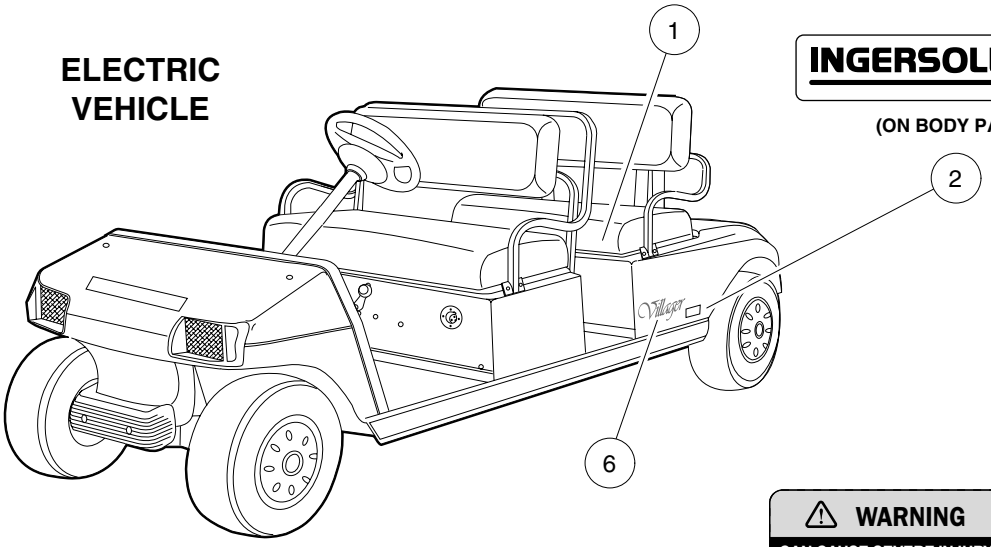

INGERSOLL-RAND

(ON BODY PANEL)

(ON STARTER/GENERATOR AND ENGINE)

(ON VEHICLE FRAME NEAR FUEL TANK)

GASOLINE VEHICLE

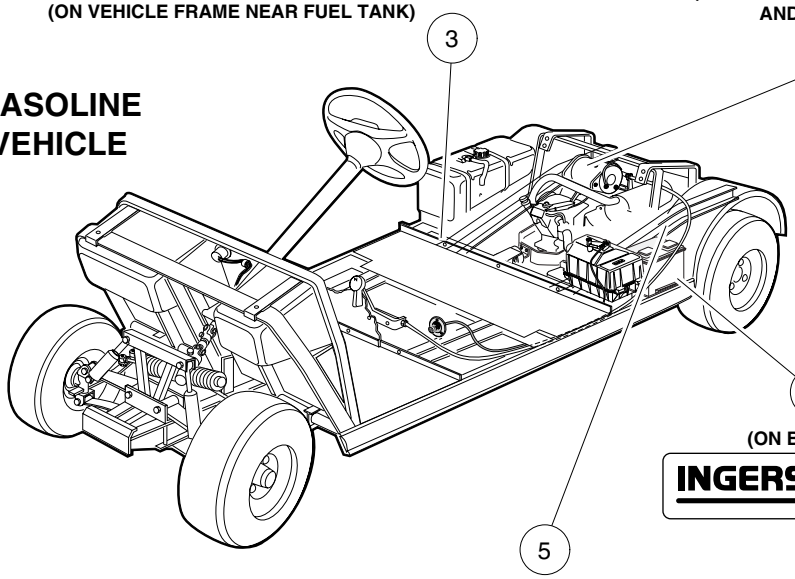

(ON BODY PANEL)

INGERSOLL-RAND

(ON VEHICLE FRAME NEAR BATTERY)

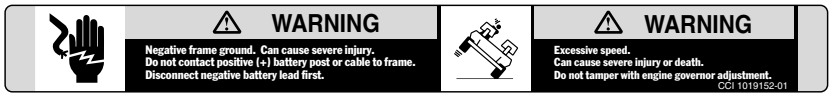

DECALS, REAR BODY – VILLAGER 6

ITEM	PART NO.	DESCRIPTION	QTY GAS	QTY ELEC
		1 2 3 4		
1	1013677	Decal, Battery Danger		1
2	101921901	Decal, Ingersoll-Rand (for 2001 vehicles only)	2	2
3	101547601	Decal, Gasoline Warning	1	
4	101960501	Decal, Rotating Parts and Hot Manifold Warning	2	
5	101915201	Decal, Frame Ground and Governor Warning	1	
6	102168701	Decal, Villager	2	2

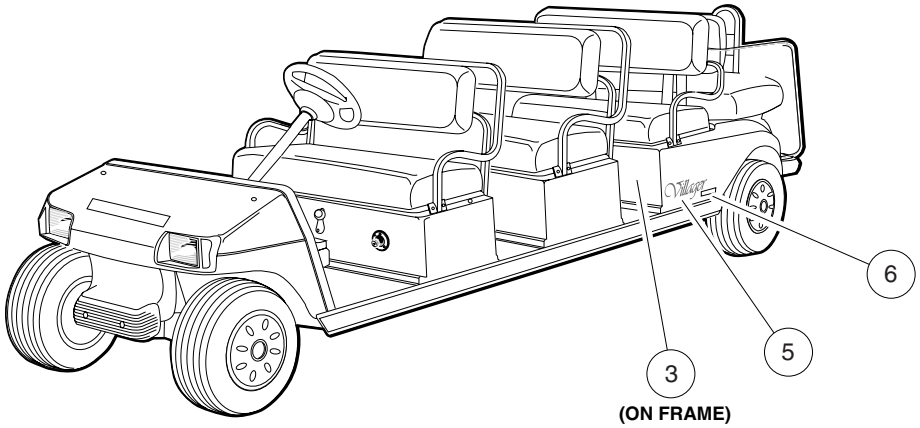

(ON FRAME)

⚠ WARNING

Negative frame ground. Can cause severe injury.
Do not contact positive (+) battery post or cable to frame.
Disconnect negative battery lead first.

⚠ WARNING

Excessive speed.
Can cause severe injury or death.
Do not tamper with engine governor adjustment.

CCI 1019152-01

⚠ WARNING

FALLING OFF COULD RESULT IN SEVERE INJURY OR DEATH

- Remain seated with entire body inside vehicle and hold on to seat handle or handrail at all times.
- Two (2) persons per bench seat maximum.
- One (1) person per bucket seat maximum.
- Do not leave children unattended on vehicle at anytime.
- Never stand in front of or behind vehicle.

CCI 101705701

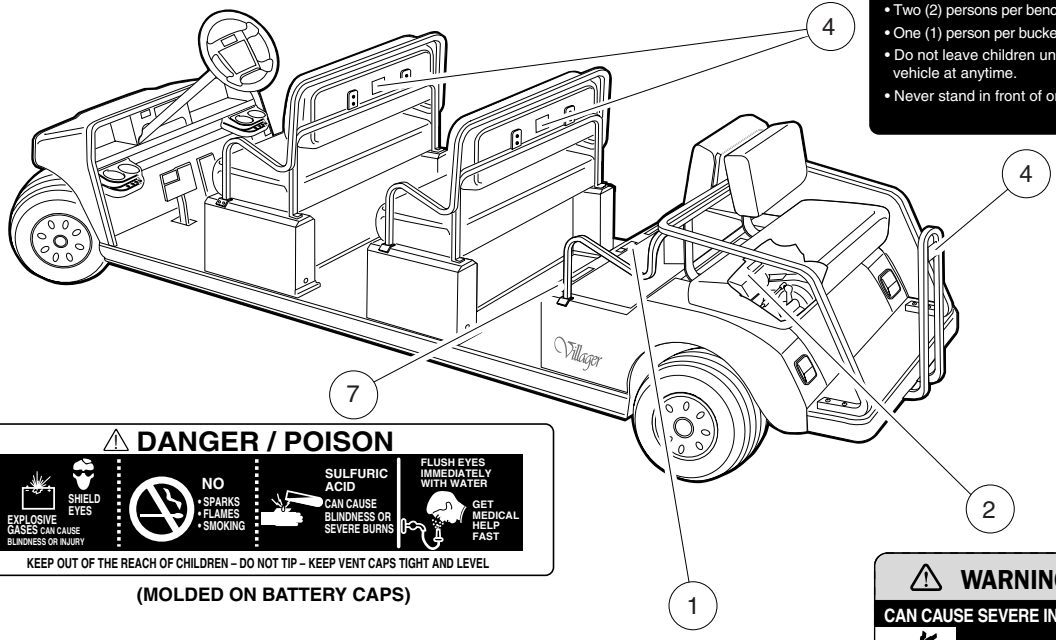

⚠ DANGER / POISON

KEEP OUT OF THE REACH OF CHILDREN – DO NOT TIP – KEEP VENT CAPS TIGHT AND LEVEL

(MOLDED ON BATTERY CAPS)

⚠ WARNING

CAN CAUSE SEVERE INJURY

Rotating parts

HOT
manifold & muffler

KEEP CLEAR CCI 1019605-01

(ON STARTER/GENERATOR AND ENGINE)

⚠ WARNING

- GASOLINE EXPLOSION / FIRE.
- CAN CAUSE SEVERE INJURY OR DEATH.
- NO SMOKING, SPARKS, OR OPEN FLAME.
- STOP ENGINE, ALLOW TO COOL BEFORE REFUELING.
- TURN FUEL VALVE ( ) ON DURING OPERATION.
  ( ) OFF DURING STORAGE OR TRANSPORT. CCI 1015476-01

(ON FRAME)

DECALS, CENTER AND REAR BODY – VILLAGER 8

ITEM	PART NO.	DESCRIPTION	QTY GAS	QTY ELEC
		1 2 3 4		
1	101547601	Decal, Gasoline Warning	1	
2	101960501	Decal, Rotating Parts and Hot Manifold Warning	2	
3	101915201	Decal, Frame Ground and Governor Warning	1	
4	101705701	Decal, Passenger Warning	3	3
5	102168701	Decal, Villager	2	2
6	101921901	Decal, Ingersoll-Rand (for 2001 vehicles only)	2	2
7	1013677	Decal, Battery Danger		1

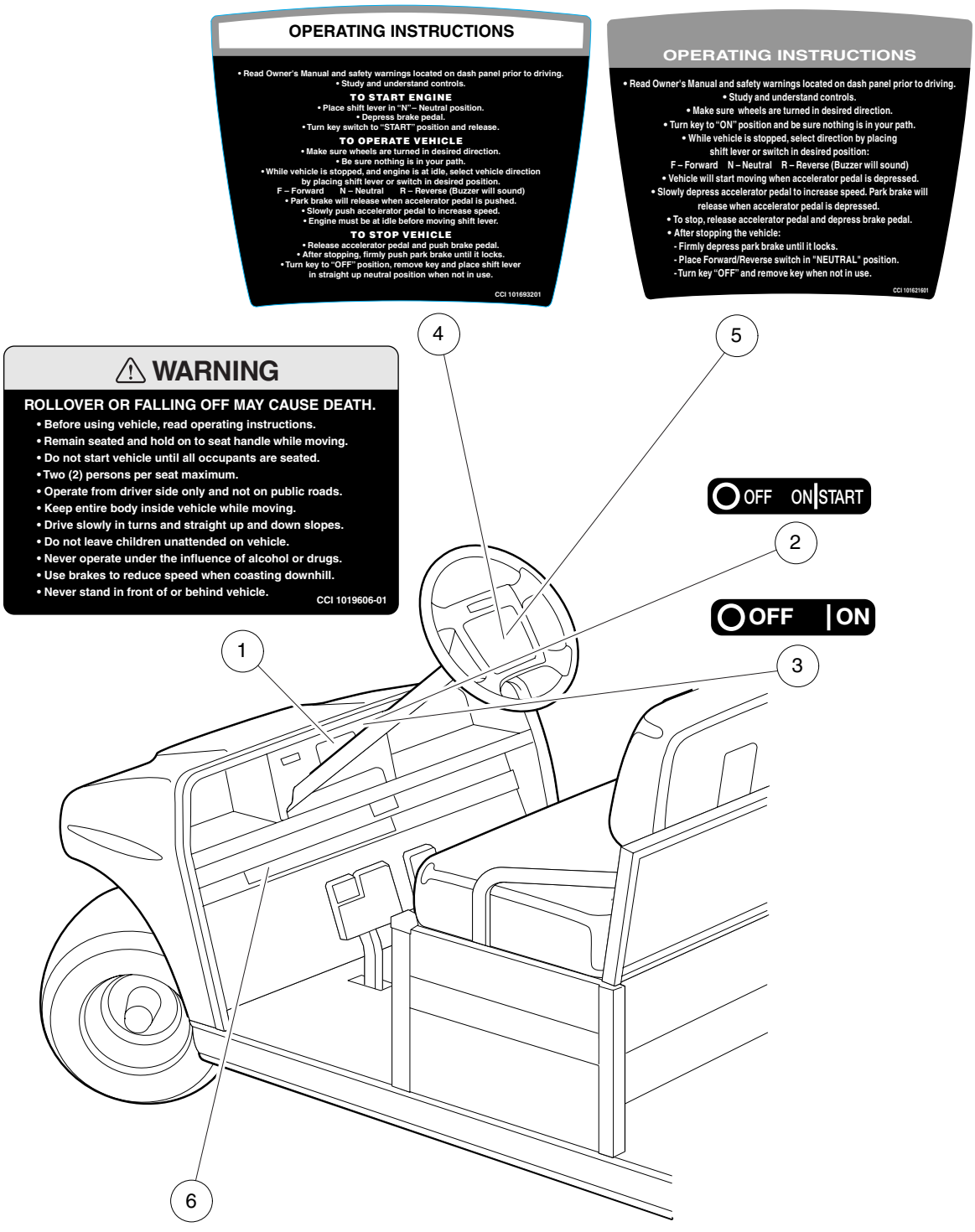
OPERATING INSTRUCTIONS
• Read Owner's Manual and safety warnings located on dash panel prior to driving.
• Study and understand controls.
TO START ENGINE
• Place shift lever in "N" – Neutral position.
• Depress brake pedal.
• Turn key switch to "START" position and release.
TO OPERATE VEHICLE
• Make sure wheels are turned in desired direction.
• Be sure nothing is in your path.
• While vehicle is stopped, and engine is at idle, select vehicle direction by placing shift lever or switch in desired position.
F – Forward N – Neutral R – Reverse (Buzzer will sound)
• Park brake will release when accelerator pedal is pushed.
• Slowly push accelerator pedal to increase speed.
• Engine must be at idle before moving shift lever.
TO STOP VEHICLE
• Release accelerator pedal and push brake pedal.
• After stopping, firmly push park brake until it locks.
• Turn key to "OFF" position, remove key and place shift lever in straight up neutral position when not in use.
CCI 101693201
OPERATING INSTRUCTIONS
• Read Owner's Manual and safety warnings located on dash panel prior to driving.
• Study and understand controls.
• Make sure wheels are turned in desired direction.
• Turn key to "ON" position and be sure nothing is in your path.
• While vehicle is stopped, select direction by placing shift lever or switch in desired position:
F – Forward N – Neutral R – Reverse (Buzzer will sound)
• Vehicle will start moving when accelerator pedal is depressed.
• Slowly depress accelerator pedal to increase speed. Park brake will release when accelerator pedal is depressed.
• To stop, release accelerator pedal and depress brake pedal.
• After stopping the vehicle:
- Firmly depress park brake until it locks.
- Place Forward/Reverse switch in "NEUTRAL" position.
- Turn key "OFF" and remove key when not in use.
CCI 101621601
WARNING
ROLLOVER OR FALLING OFF MAY CAUSE DEATH.
• Before using vehicle, read operating instructions.
• Remain seated and hold on to seat handle while moving.
• Do not start vehicle until all occupants are seated.
• Two (2) persons per seat maximum.
• Operate from driver side only and not on public roads.
• Keep entire body inside vehicle while moving.
• Drive slowly in turns and straight up and down slopes.
• Do not leave children unattended on vehicle.
• Never operate under the influence of alcohol or drugs.
• Use brakes to reduce speed when coasting downhill.
• Never stand in front of or behind vehicle.
CCI 1019606-01
OFF ON START
OFF ON
1
2
3
4
5
6
VEHICLE LOADING
Read Owner's Manual and warnings on dash.
• Vehicle rated capacity - 1500 lbs. on level surface only. Weight to include passengers, cargo bed load, and gross trailer weight. See Owner's Manual.
• Maximum cargo load CARRYALL 6 or TURF 6 - 1000 lbs., TRANSPORTER - 300 lbs. Weight to include cargo bed load and gross trailer weight.
• Maximum trailer hitch tongue weight - 150 lbs.
• Cargo should be evenly spread over the floor of the cargo bed as far forward as possible and secured.
• For vehicle stability, when fully loaded, drive slowly and avoid stopping on or backing down steep hills.
• Avoid top heavy loads. See Owner's Manual.
• When driving on uneven terrain or down steep hills, reduce speed and load.
CCI 101960001

DECALS – TRANSPORTER 4 AND TRANSPORTER 6

ITEM	PART NO.	DESCRIPTION	QTY GAS	QTY ELEC
		1 2 3 4		
1	101960601	Decal, Driver/Passenger Warning	1	1
2	101825102	Decal, Key Switch (gasoline vehicle only)	1	
3	101825101	Decal, Key Switch (electric vehicle only)		1
4	101693201	Decal, Operating Instructions (gasoline vehicle only)	1	
5	101621601	Decal, Operating Instructions (electric vehicle only)		1
6	101960001	Decal, Vehicle Loading	1	1

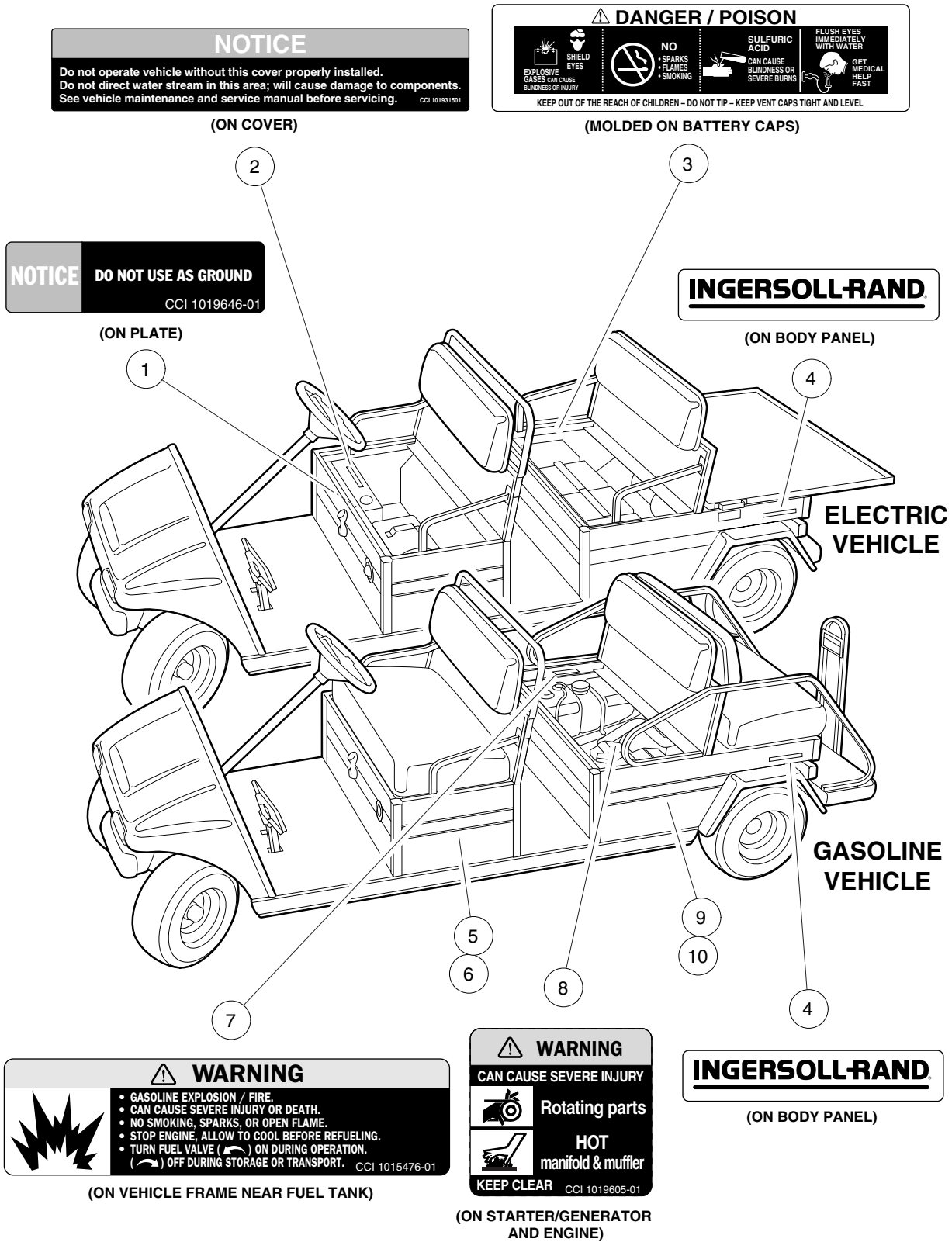
NOTICE
Do not operate vehicle without this cover properly installed.
Do not direct water stream in this area; will cause damage to components.
See vehicle maintenance and service manual before servicing.
CCI 101931501
(ON COVER)
DANGER / POISON
SHIELD EYES
EXPLOSIVE GASES CAN CAUSE BLINDNESS OR INJURY
NO
• SPARKS
• FLAMES
• SMOKING
SULFURIC ACID
CAN CAUSE BLINDNESS OR SEVERE BURNS
FLUSH EYES IMMEDIATELY WITH WATER
GET MEDICAL HELP FAST
KEEP OUT OF THE REACH OF CHILDREN – DO NOT TIP – KEEP VENT CAPS TIGHT AND LEVEL
(MOLDED ON BATTERY CAPS)
NOTICE
DO NOT USE AS GROUND
CCI 1019646-01
(ON PLATE)
INGERSOLL-RAND
(ON BODY PANEL)
ELECTRIC VEHICLE
GASOLINE VEHICLE
1
2
3
4
5
6
7
8
9
10
WARNING
• GASOLINE EXPLOSION / FIRE.
• CAN CAUSE SEVERE INJURY OR DEATH.
• NO SMOKING, SPARKS, OR OPEN FLAME.
• STOP ENGINE, ALLOW TO COOL BEFORE REFUELING.
• TURN FUEL VALVE ( ) ON DURING OPERATION.
( ) OFF DURING STORAGE OR TRANSPORT.
CCI 1015476-01
(ON VEHICLE FRAME NEAR FUEL TANK)
WARNING
CAN CAUSE SEVERE INJURY
Rotating parts
HOT
manifold & muffler
KEEP CLEAR
CCI 1019605-01
(ON STARTER/GENERATOR AND ENGINE)
INGERSOLL-RAND
(ON BODY PANEL)

DECALS – TRANSPORTER 4 AND TRANSPORTER 6, CONTINUED

ITEM	PART NO.	DESCRIPTION	QTY GAS	QTY ELEC
		1 2 3 4		
1	101964601	Decal, No Ground		1
2	101931501	Decal, Component Cover Caution		1
3	1013677	Decal, Battery Danger		1
4	101921901	Decal, Ingersoll-Rand (for 2001 vehicles only)	2	2
5	102249901	Decal, TransPorter 4 (passenger side)	1	1
6	102244501	Decal, TransPorter 4 (driver side)	1	1
7	101547601	Decal, Gasoline Warning	1	
8	101960501	Decal, Rotating Parts and Hot Manifold Warning	1	
9	102244801	Decal, TransPorter 6 (passenger side)	1	1
10	102244701	Decal, TransPorter 6 (driver side)	1	1

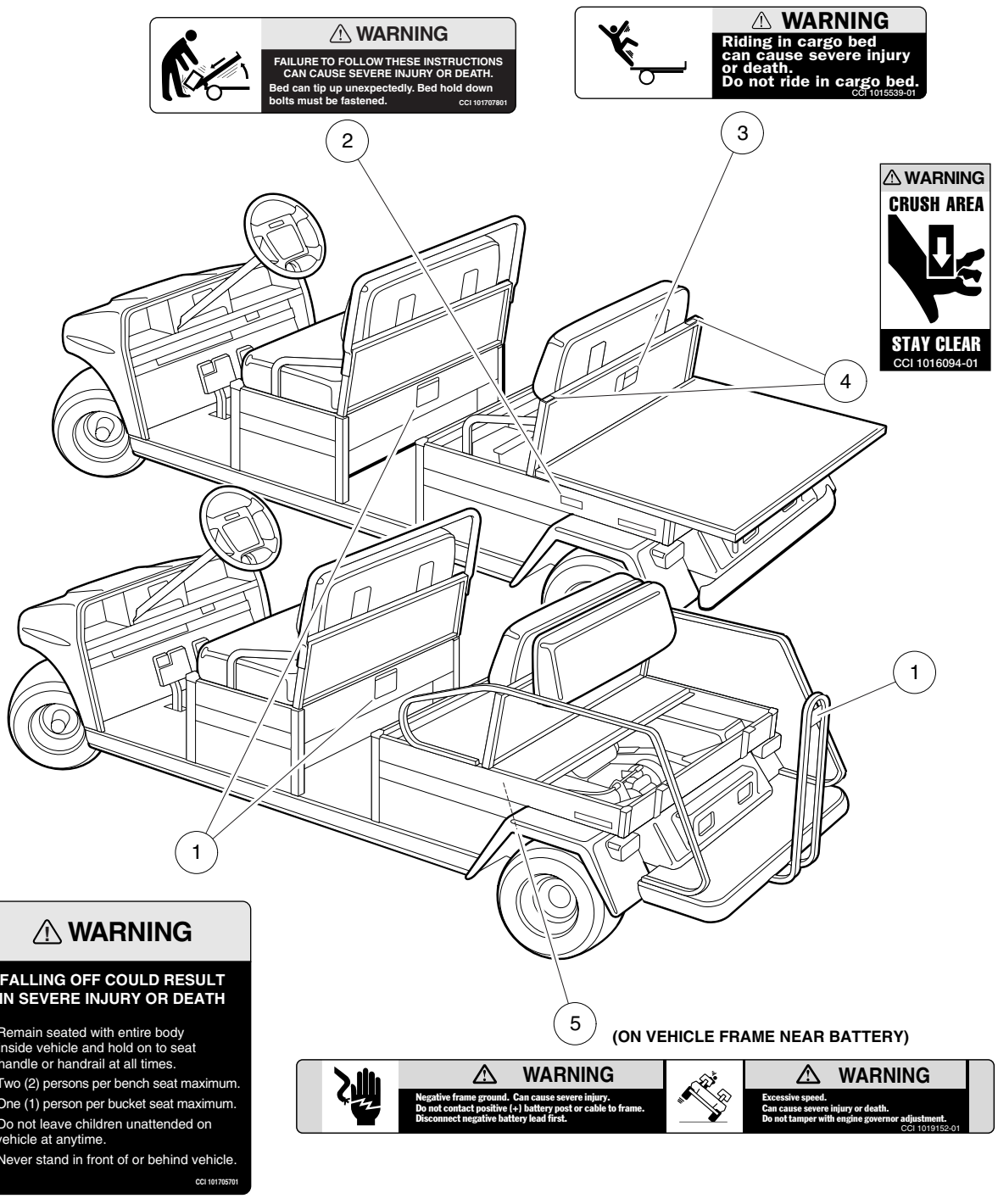
⚠ WARNING
FAILURE TO FOLLOW THESE INSTRUCTIONS CAN CAUSE SEVERE INJURY OR DEATH.
Bed can tip up unexpectedly. Bed hold down bolts must be fastened.
CCI 101707801
⚠ WARNING
Riding in cargo bed can cause severe injury or death.
Do not ride in cargo bed.
CCI 1015539-01
⚠ WARNING
CRUSH AREA
STAY CLEAR
CCI 1016094-01
2
3
4
1
1
5
(ON VEHICLE FRAME NEAR BATTERY)
⚠ WARNING
FALLING OFF COULD RESULT IN SEVERE INJURY OR DEATH
• Remain seated with entire body inside vehicle and hold on to seat handle or handrail at all times.
• Two (2) persons per bench seat maximum.
• One (1) person per bucket seat maximum.
• Do not leave children unattended on vehicle at anytime.
• Never stand in front of or behind vehicle.
CCI 101705701
⚠ WARNING
Negative frame ground. Can cause severe injury.
Do not contact positive (+) battery post or cable to frame.
Disconnect negative battery lead first.
⚠ WARNING
Excessive speed.
Can cause severe injury or death.
Do not tamper with engine governor adjustment.
CCI 1019152-01

DECALS – TRANSPORTER 4 AND TRANSPORTER 6, CONTINUED

ITEM	PART NO.	DESCRIPTION	QTY GAS	QTY ELEC
		1 2 3 4		
1	101705701	Decal, Passenger Warning (quantity 1 for TransPorter 4)	2	2
2	101707801	Decal, Bed Bolt Warning (TransPorter 4 only)	1	1
3	101553901	Decal, Bed Load Warning (TransPorter 4 only)	1	1
4	101609401	Decal, Crush Area (TransPorter 4 only)	2	2
5	101915201	Decal, Frame Ground and Governor Warning	1	

3
G
E

BRAKES, PEDAL, AND CABLE ASSEMBLIES

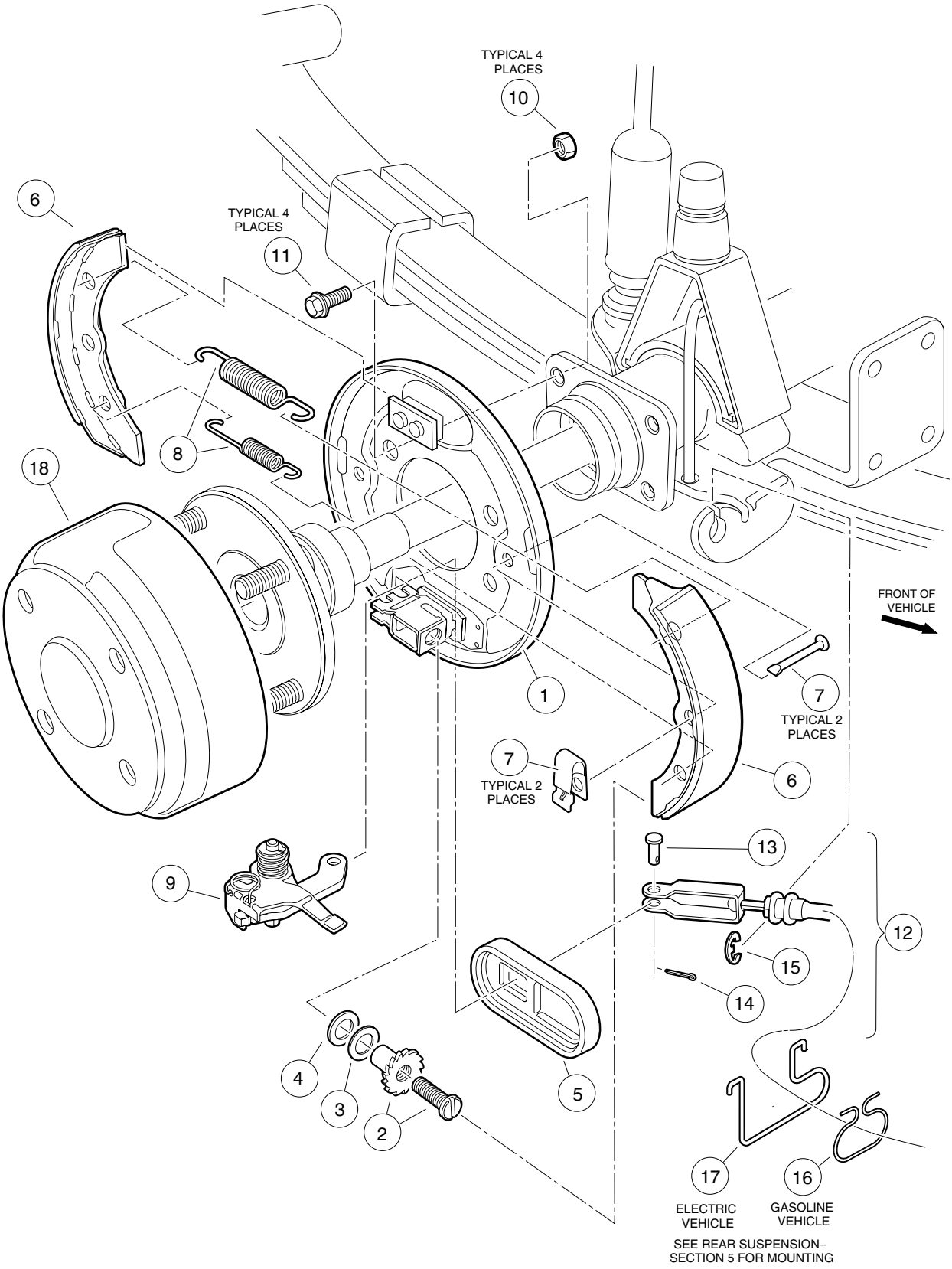
TYPICAL 4 PLACES
10
6
TYPICAL 4 PLACES
11
8
18
FRONT OF VEHICLE
1
7
TYPICAL 2 PLACES
7
TYPICAL 2 PLACES
6
13
9
12
15
14
4
3
2
5
17
16
ELECTRIC VEHICLE
GASOLINE VEHICLE
SEE REAR SUSPENSION– SECTION 5 FOR MOUNTING

REAR BRAKE ASSEMBLY, SELF-ADJUSTING – VILLAGER 4

ITEM	PART NO.	DESCRIPTION	QTY GAS	QTY ELEC
		1 2 3 4		
	101823301	Cluster, Passenger-Side Brake (includes items 1 - 9)	1	1
	101823302	Cluster, Driver-Side Brake (includes items 1 - 9)	1	1
1	101824001	Assembly, Backing Plate, Passenger-Side (includes items 2 - 4)	1	1
1	101824002	Assembly, Backing Plate, Driver-Side (includes items 2 - 4)	1	1
2	101816501	Mechanism, Adjusting, Passenger-Side	1	1
2	101816502	Mechanism, Adjusting, Driver-Side	1	1
3	101823901	Washer	1	1
4	101823801	Washer, Plate	1	1
5	1010850	Cover, Dust	1	1
6	101823201	Package, Brake Shoe (four pieces)	1	1
7	1011466	Kit, Shoe Retainer (four pieces)	1	1
8	101816301	Package, Brake Spring (four pieces)	1	1
9	101815501	Assembly, Lever, Passenger-Side	1	1
9	101815502	Assembly, Lever, Driver-Side	1	1
10	1013924	Nut, Hex-Head Lock, Grade 8, 5/16-24	8	8
11	1014153	Bolt, Brake Cluster Mounting, Grade 8, 5/16-24 x 7/8	8	8
12	102022101	Kit, Brake Cable (includes items 13 -15)	2	2
13	1010829	Pin, Clevis, 5/16	1	1
14	1035	Pin, Cotter, 3/32 x 1	1	1
15	1011779	E-Clip, 1/2	2	2
16	101900801	Hanger, Brake Cable (gasoline vehicle only)	2	
17	1013207	Hanger, Brake Cable (electric vehicle only)		2
18	101791101	Drum, Brake	2	2

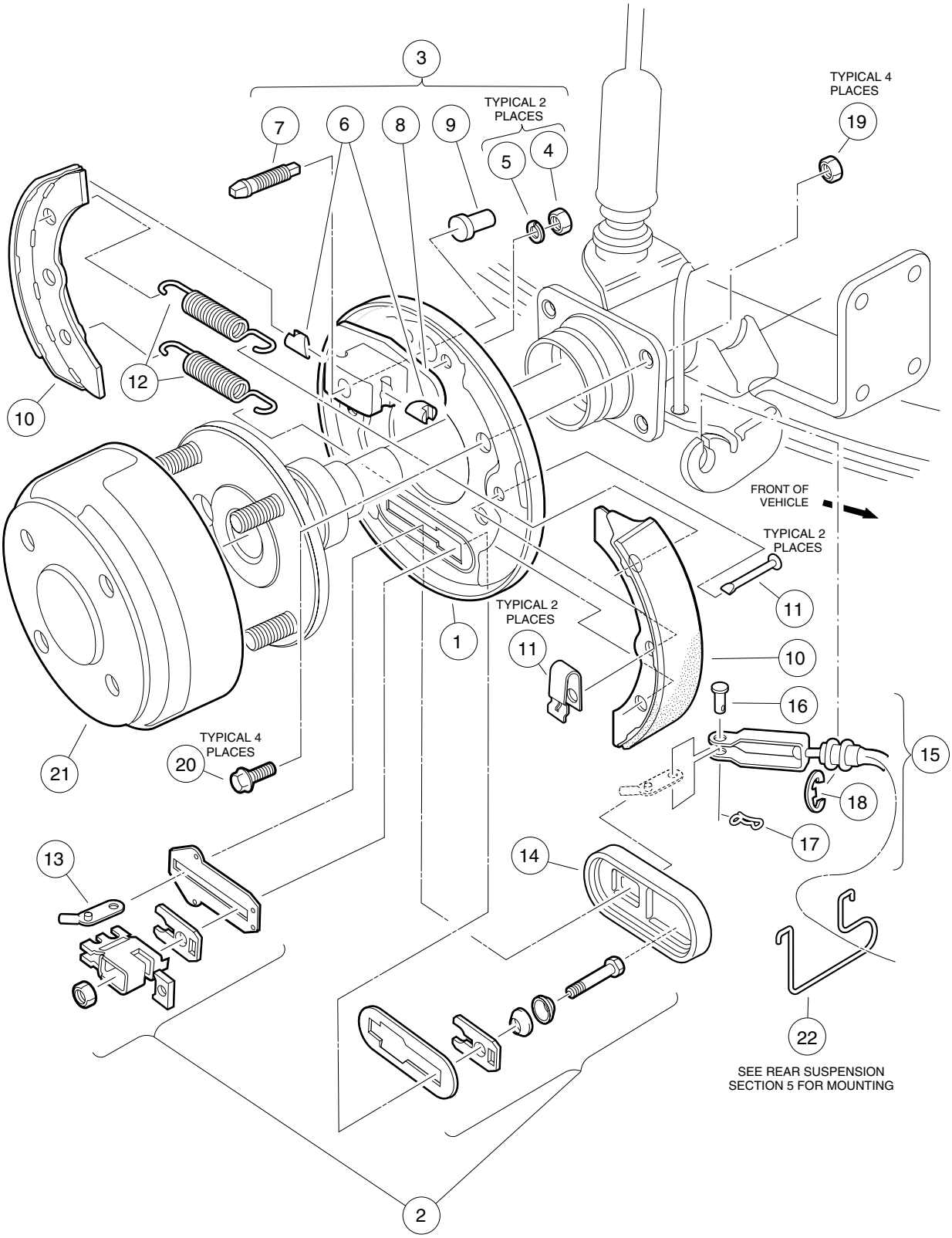
3
TYPICAL 2 PLACES
7
6
8
9
5
4
TYPICAL 4 PLACES
19
12
10
FRONT OF VEHICLE
TYPICAL 2 PLACES
11
1
TYPICAL 2 PLACES
11
10
16
15
TYPICAL 4 PLACES
20
21
18
17
13
14
22
SEE REAR SUSPENSION SECTION 5 FOR MOUNTING
2

REAR BRAKE ASSEMBLY, MANUALLY ADJUSTED – VILLAGER 6 AND 8, TRANSPORTER 4 AND 6

ITEM	PART NO.	DESCRIPTION	QTY GAS	QTY ELEC
		1 2 3 4		
	1016573	Cluster, Passenger-Side Brake Without Brake Drum (includes items 1 - 14)	1	1
	1016557	Cluster, Driver-Side Brake Without Brake Drum (includes items 1 - 14)	1	1
1	N/A	Plate, Backing, Driver-Side	1	1
1	N/A	Plate, Backing, Passenger-Side	1	1
2	1011465	Kit, Brake Actuator	1	1
3	1011467	Kit, Anchor Body (includes items 4 - 9)	1	1
4	1011114	Nut, M6 x 1	2	2
5	451	Washer, Lock, 1/4	2	2
6	N/A	Piston, Anchor	2	2
7	N/A	Bolt, Adjustment	1	1
8	N/A	Body, Anchor	1	1
9	1011303	Cap, Adjustment Bolt	1	1
10	101146302	Package, Brake Shoe (four pieces)	1	1
11	1011466	Kit, Shoe Retainer (four pieces)	1	1
12	1011464	Package, Brake Spring (four pieces)	1	1
13	N/A	Arm, Brake Lever	1	1
14	1010850	Cover, Dust	1	1
15	102166901	Kit, Brake Cable (includes two each of items 16 and 17 and four each of item 18)	1	1
16	1010829	Pin, Clevis, 5/16	2	2
17	102292801	Pin, Bow Tie Locking	2	2
18	1011779	E-Clip, 1/2	4	4
19	1013924	Nut, Cone Lock, Grade 8, 5/16-24	8	8
20	1014153	Bolt, Brake Cluster Mounting, Grade 8, 5/16-24 x 7/8	8	8
21	101791101	Drum, Brake	2	2
22	1013207	Hanger, Brake Cable	2	2

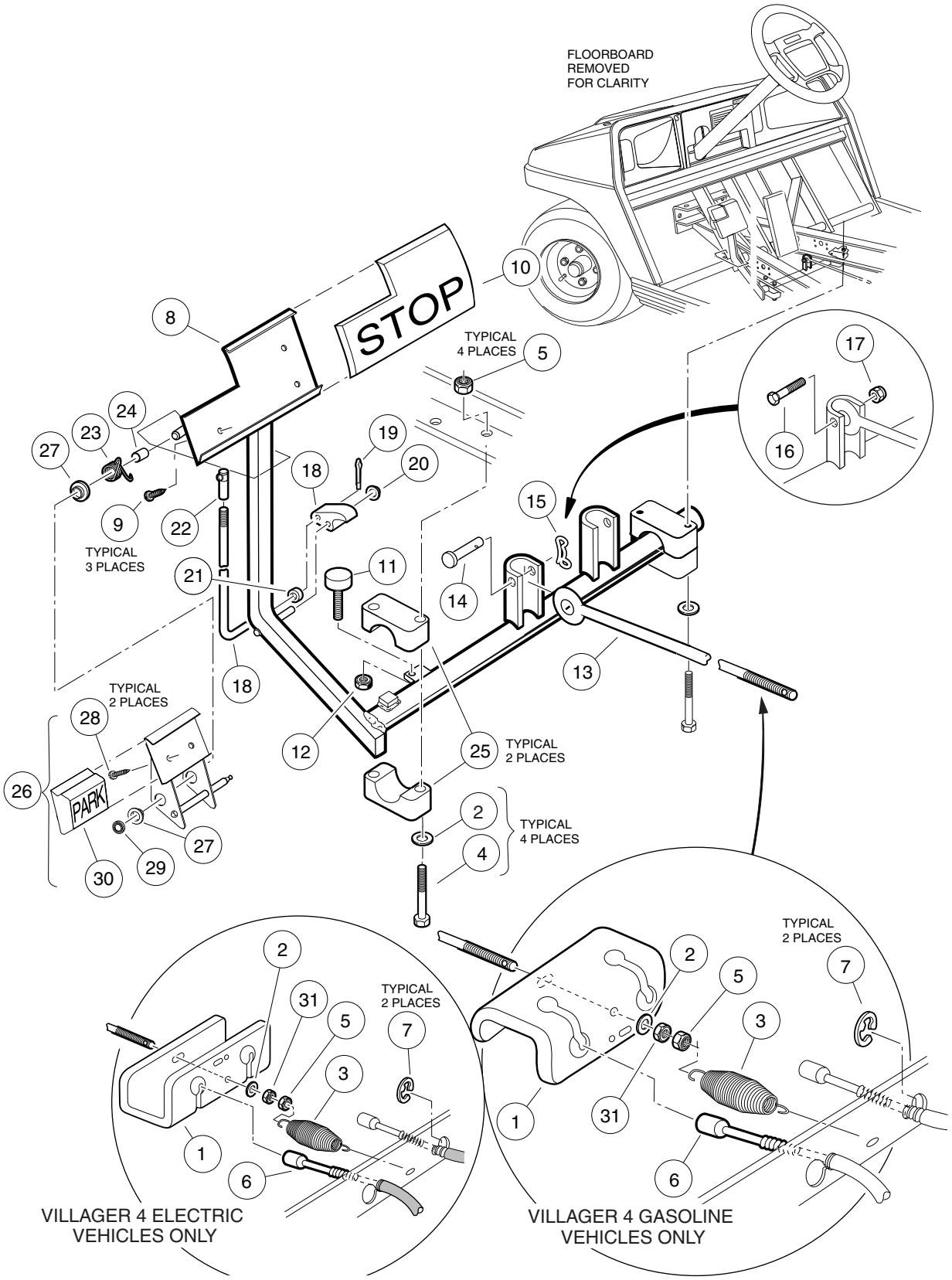
FLOORBOARD
REMOVED
FOR CLARITY
STOP
PARK
TYPICAL
4 PLACES
TYPICAL
3 PLACES
TYPICAL
2 PLACES
TYPICAL
2 PLACES
TYPICAL
4 PLACES
TYPICAL
2 PLACES
TYPICAL
2 PLACES
VILLAGER 4 ELECTRIC
VEHICLES ONLY
VILLAGER 4 GASOLINE
VEHICLES ONLY

BRAKE PEDAL AND CABLE ASSEMBLY – VEHICLE WITH TWO-WHEEL BRAKES

ITEM	PART NO.	DESCRIPTION	QTY GAS	QTY ELEC
		1 2 3 4		
1	101990801	Equalizer	1	1
2	1241	Washer, Flat, 5/16	5	5
3	1013531	Spring, Brake Return	1	1
4	1010921	Screw, Hex-Head Cap, 5/16-18 x 2-1/2	4	4
5	7473	Nut, Nylon Lock, 5/16-18	5	5
6	102022101	Kit, Brake Cable (includes item 7, and items 13 and 14 on page 4-3)	2	2
7	1011779	E-Clip, 1/2	2	2
8	101878201	Kit, Brake Pedal (includes items 9 and 10)	1	1
9	7716	Screw, Slotted Hex Washer-Head, #10-16 x 1/2	3	3
10	1013869	Pad, Brake Pedal	1	1
11	1010878	Bumper, Rubber	1	1
12	1028	Nut, Hex, 1/4-20	1	1
13	101953101	Rod, Equalizer	1	1
14	102323201	Pin, Clevis, 5/16 (later style hardware used with item 15)	1	1
15	102323101	Pin, Bow Tie Locking	1	1
16	101953001	Bolt, Hex-Head Shoulder, 3/8 x 1 (earlier style hardware used with item 17)	1	1
17	7473	Nut, Nylon Lock, 5/16-18	1	1
	101187702	Kit, Park Brake Latch (includes items 18 - 22 and item 26 on page 4-13)	1	1
18	N/A	Rod and Pawl	1	1
19	1017029	Pin, Cotter, 7/64 x 1/2	1	1
20	1010877	Nut, Push, 5/16	1	1
21	1010805	Sleeve, Park Brake Rod	1	1
22	1010932	Joint, Ball, 1/4-28	1	1
23	1010933	Spring, Park Brake Torsion	1	1
24	1010927	Spacer, Park Brake	1	1
25	1011402	Package, Brake Mounting Block (contains upper and lower for driver and passenger sides)	1	1
26	1011418	Kit, Park Brake Pedal (includes items 27 - 30)	1	1
27	1032	Bushing, Nylon	2	2
28	8626	Screw, Slotted Hex Washer-Head, #10-16 x 5/8	2	2
29	1013876	Nut, Push, 3/8	1	1
30	1013870	Pad, Park Brake	1	1
31	1242	Nut, Hex, 5/16-18	1	1

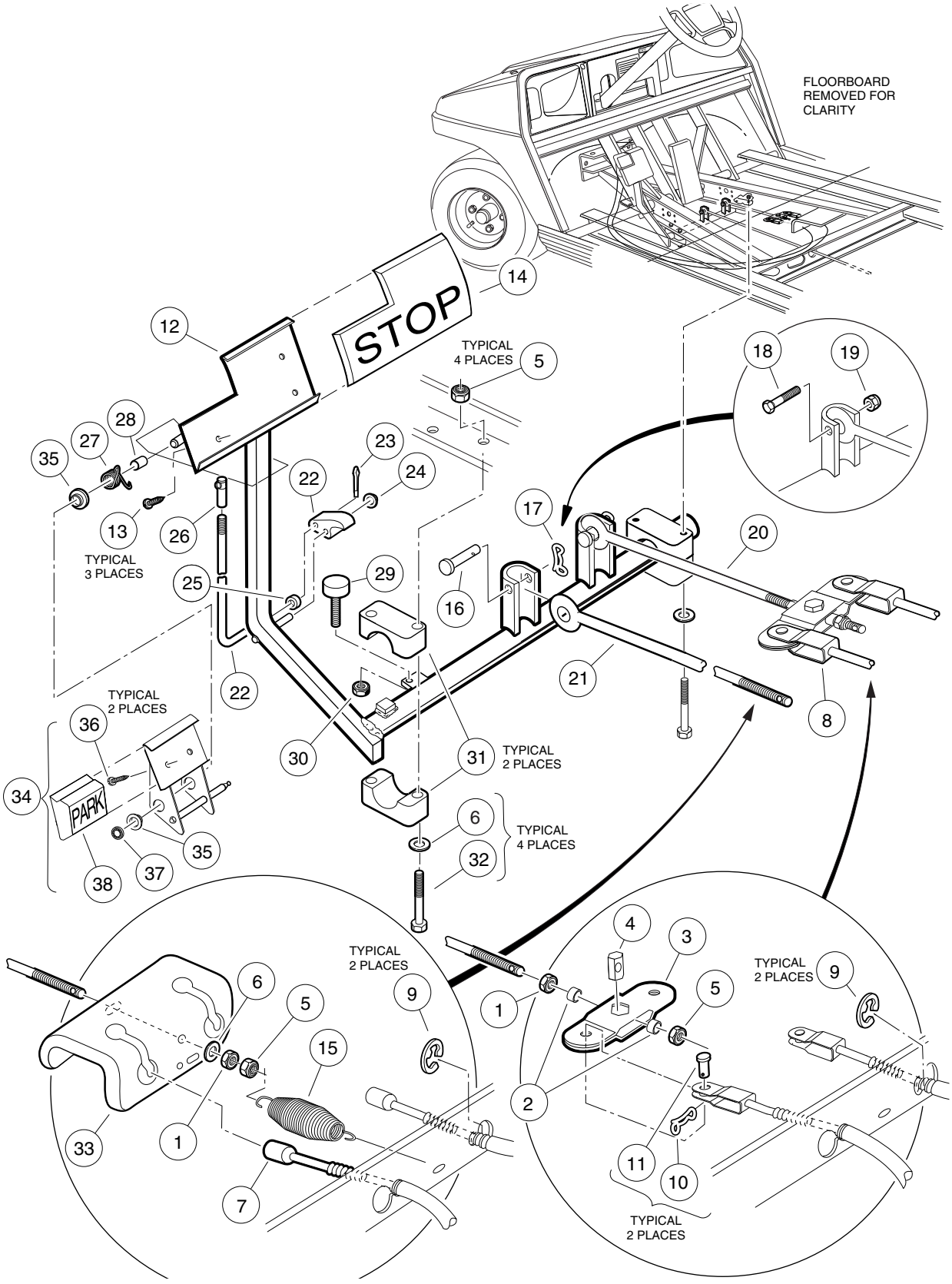
FLOORBOARD
REMOVED FOR
CLARITY
STOP
TYPICAL
4 PLACES
TYPICAL
3 PLACES
TYPICAL
2 PLACES
PARK
TYPICAL
2 PLACES
TYPICAL
4 PLACES
TYPICAL
2 PLACES
TYPICAL
2 PLACES
TYPICAL
2 PLACES

BRAKE PEDAL AND CABLE ASSEMBLY – VEHICLE WITH FOUR-WHEEL BRAKES

ITEM	PART NO.	DESCRIPTION	QTY GAS	QTY ELEC
		1 2 3 4		
1	1242	Nut, Hex, 5/16-18	1	1
2	101865301	Spacer, Equalizer	2	2
3	1017211	Kit, Equalizer and Pivot Limiter (includes item 4)	1	1
4	N/A	Pin, Equalizer Pivot	1	1
5	7473	Nut, Nylon Lock, 5/16-18	5	5
6	1241	Washer, Flat, 5/16	5	5
7	102166901	Kit, Brake Cable, Rear (includes four each of item 9 and two each of items 10 and 11)	1	1
8	101874601	Kit, Brake Cable, Front (includes items 9 - 11)	1	1
9	1011779	E-Clip, 1/2	4	4
10	102292801	Pin, Bow Tie Locking	4	4
11	1010829	Pin, Clevis, 5/16	4	4
12	101878201	Kit, Brake Pedal (includes items 13 and 14)	1	1
13	7716	Screw, Slotted Hex Washer-Head, #10-16 x 1/2	3	3
14	1013869	Pad, Brake Pedal	1	1
15	1013531	Spring, Brake Return	1	1
16	102323201	Pin, Clevis, 5/16 (newer style hardware used with item 17)	2	2
17	102323101	Pin, Bow Tie Locking	2	2
18	101953001	Bolt, Hex-Head Shoulder, 3/8 x 1 (older style hardware used with item 19)	2	2
19	7473	Nut, Nylon Lock, 5/16-18	2	2
20	101953106	Rod, Equalizer, Front	1	1
21	101953103	Rod, Equalizer, Rear (Villager 6, TransPorter 4, and TransPorter 6)	1	1
21	101953104	Rod, Equalizer, Rear (Villager 8 only)	1	1
	101187702	Kit, Park Brake Latch (includes items 22 - 26 and item 26 on page 4-13 or item 25 on page 4-15)	1	1
22	N/A	Rod and Pawl	1	1
23	1017029	Pin, Cotter, 7/64 x 1/2	1	1
24	1010877	Nut, Push, 5/16	1	1
25	1010805	Sleeve, Park Brake Rod	1	1
26	1010932	Joint, Ball, 1/4-28	1	1
27	1010933	Spring, Park Brake Torsion	1	1
28	1010927	Spacer, Park Brake	1	1
29	1010878	Bumper, Rubber	1	1
30	1028	Nut, Hex, 1/4-20	1	1
31	1011402	Package, Brake Mounting Block (contains upper and lower for left and right sides)	1	1
32	1010921	Screw, Hex-Head Cap, 5/16-18 x 2-1/2	4	4
33	101990801	Equalizer	1	1
34	1011418	Kit, Park Brake Pedal (includes items 35 - 38)	1	1
35	1032	Bushing, Nylon	2	2
36	8626	Screw, Slotted Hex Washer-Head, #10-16 x 5/8	2	2
37	1013876	Nut, Push, 3/8	1	1
38	1013870	Pad, Park Brake	1	1

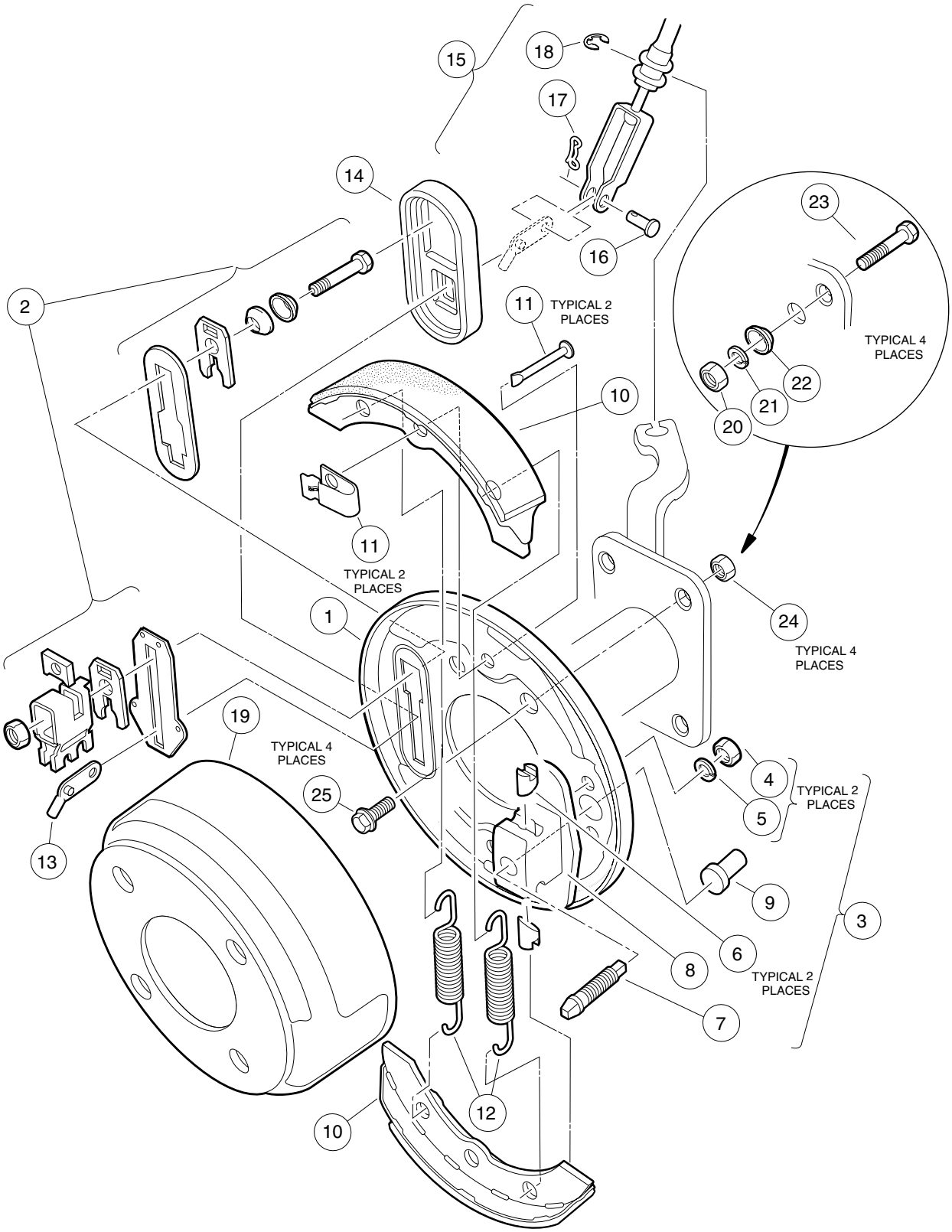
15
18
17
14
16
23
2
11
TYPICAL 2
PLACES
TYPICAL 4
PLACES
22
21
20
10
11
TYPICAL 2
PLACES
1
24
TYPICAL 4
PLACES
19
TYPICAL 4
PLACES
25
4
5
TYPICAL 2
PLACES
13
9
3
6
8
TYPICAL 2
PLACES
7
12
10

FRONT BRAKE ASSEMBLY – VEHICLE WITH FOUR-WHEEL BRAKES

ITEM	PART NO.	DESCRIPTION	QTY GAS	QTY ELEC
		1 2 3 4		
	1016573	Cluster, Passenger-Side Brake, Without Brake Drum (includes items 1 - 14)	1	1
	1016557	Cluster, Driver-Side Brake, Without Brake Drum (includes items 1 - 14)	1	1
1	N/A	Plate, Backing, Passenger-Side	1	1
1	N/A	Plate, Backing, Driver-Side	1	1
2	1011465	Kit, Brake Actuator	1	1
3	1011467	Kit, Anchor Body (includes items 4 - 9)	1	1
4	1011114	Nut, M6 x 1	2	2
5	451	Washer, Lock, 1/4	2	2
6	N/A	Piston, Anchor	2	2
7	N/A	Bolt, Adjustment	1	1
8	N/A	Body, Anchor	1	1
9	1011303	Cap, Adjustment Bolt	1	1
10	101146302	Package, Brake Shoe (four pieces)	1	1
11	1011466	Kit, Shoe Retainer (four pieces)	1	1
12	1011464	Package, Brake Spring (four pieces)	1	1
13	N/A	Arm, Brake Lever	1	1
14	1010850	Cover, Dust	1	1
15	101874601	Kit, Brake Cable Front (includes items 16 - 18)	1	1
16	1010829	Pin, Clevis, 5/16	4	4
17	102292801	Pin, Bow Tie Locking	4	4
18	1011779	E-Clip, 1/2	4	4
19	1011137	Drum, Brake	4	4
		Items 20 - 23 are for 2001, 2002, and early 2003 vehicles:		
20	101872701	Nut, Hex, 5/16-24	8	8
21	7174	Washer, Lock, 5/16	8	8
22	101869001	Washer, Cone, 5/16	8	8
23	1017232	Screw, Hex-Head Cap, 5/16-24 x 1	8	8
		Items 24 and 25 are for later 2003 vehicles:		
24	1013924	Nut, Cone Lock, Grade 8, 5/16-24	8	8
25	1014153	Bolt, Brake Cluster Mounting, Grade 8, 5/16-24 x 7/8	8	8
		Note: See page 5-11 for front brake cable clamp and bracket.		

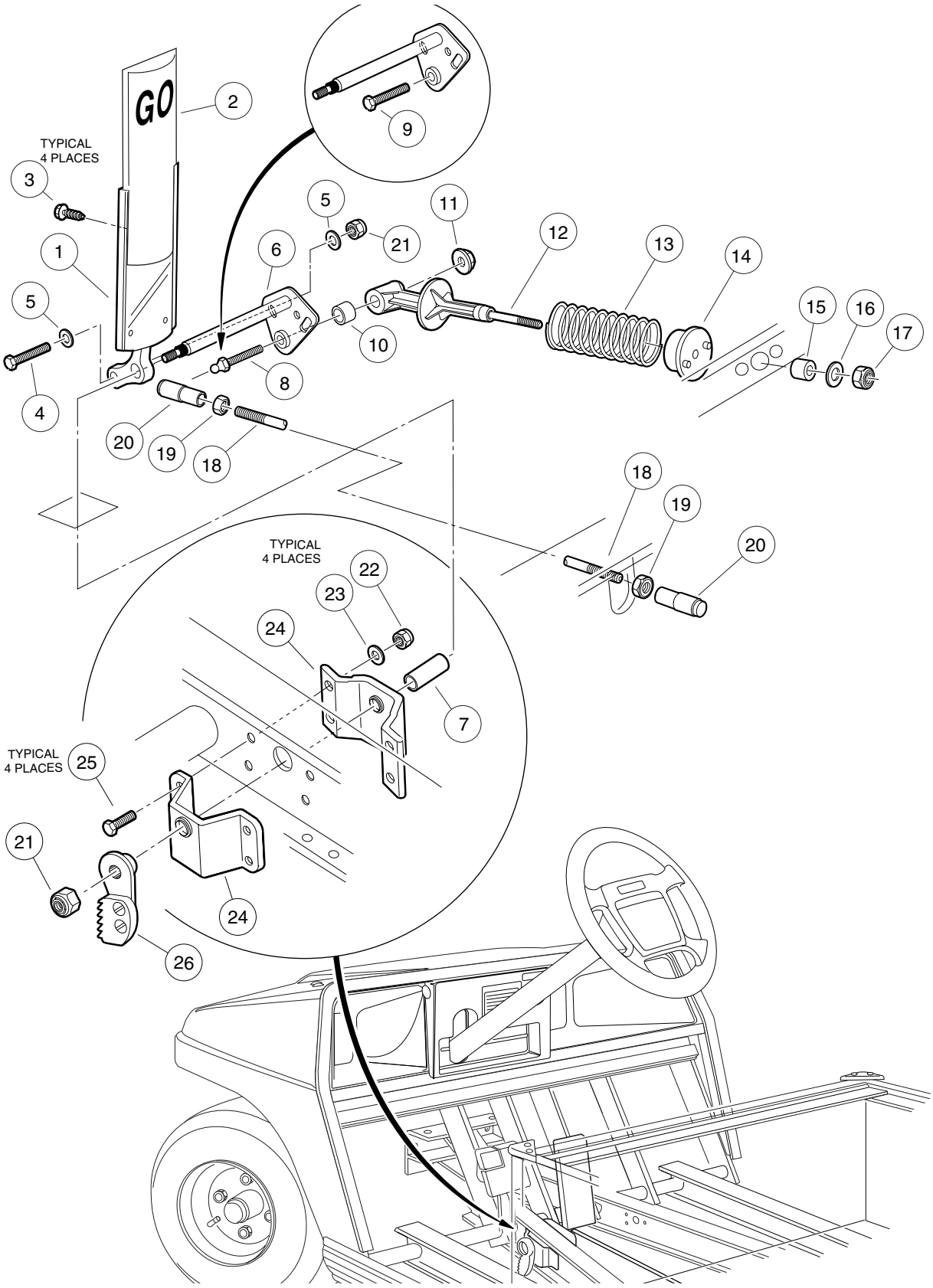
GO
TYPICAL
4 PLACES
TYPICAL
4 PLACES
TYPICAL
4 PLACES
1
2
3
4
5
6
7
8
9
10
11
12
13
14
15
16
17
18
19
20
21
22
23
24
25
26

ACCELERATOR PEDAL ASSEMBLY – VILLAGER 4, ALL ELECTRIC WITH MCOR, AND GASOLINE VEHICLES

ITEM	PART NO.	DESCRIPTION	QTY GAS	QTY ELEC
		1 2 3 4 The information on this page pertains to the following vehicles within the scope of this manual: • All gasoline vehicles • Villager 4 electric vehicles • The following electric vehicles with serial numbers 0112-001470 and greater (vehicles with the MCOR device): Villager 6, Villager 8, TransPorter 4, and TransPorter 6		
1	1017696	Sub-Assembly, Accelerator Pedal (includes items 2 and 3)	1	1
2	1013871	Pad, Accelerator Pedal	1	1
3	7716	Screw, Slotted Hex Washer-Head, #10-16 x 1/2	4	4
4	1624	Screw, Hex Cap, 3/8-16 x 1-1/2	1	1
5	334	Washer, Flat, 3/8	2	2
6	102026001	Kit, Accelerator Pivot Rod (includes item 7)	1	1
7	1011700	Spacer	1	1
8	101818801	Stud, Ball (for all vehicles listed above except those equipped with MCOR)	1	1
9	101862001	Screw, Hex-Head Cap, 1/4-20 x 1-3/8 (MCOR vehicles)		1
10	1017424	Bearing, Pivot Support	1	1
11	101966901	Nut, Flange, 1/4-28	1	1
12	101817401	Retainer, Spring	1	1
13	101796201	Spring, Return	1	1
14	1017378	Cup, Spring	1	1
15	1017380	Bumper, Return Spring	1	1
16	1241	Washer, Flat, 5/16	1	1
17	7473	Nut, Nylon Lock, 5/16-18	1	1
18	101871901	Assembly, Accelerator Rod (electric Villager 4 vehicles with serial numbers lower than 0112-001470 only) (includes items 19 and 20)		1
18	101912401	Assembly, Accelerator Rod (gasoline Villager 4 vehicles only) (includes items 19 and 20)	1	
18	101674702	Assembly, Accelerator Rod (gasoline Villager 6, TransPorter 4, TransPorter 6 vehicles) (includes items 19 and 20)	1	
18	101674704	Assembly, Accelerator Rod (gasoline Villager 8 vehicles only) (includes items 19 and 20)	1	
19	1011084	Nut, UNF Hex Jam, 1/4-28	2	2
20	1011734	Joint, Spring-Loaded Ball	2	2
21	8754	Nut, Nylon Lock, 3/8-16	2	2
22	8233	Nut, Nylon Lock, 1/4-20	4	4
23	1014007	Washer, Flat, Type B, 1/4	4	4
24	1011694	Support, Accelerator Pivot Rod	2	2
25	101861901	Screw, Hex Cap, 1/4-20 x 1-1/8	4	4
	101187702	Kit, Park Brake Latch (includes item 26, and items 18 - 22 on page 4-7 or items 22 - 26 on page 4-9)	1	1
26	N/A	Ratchet, Park Brake	1	1

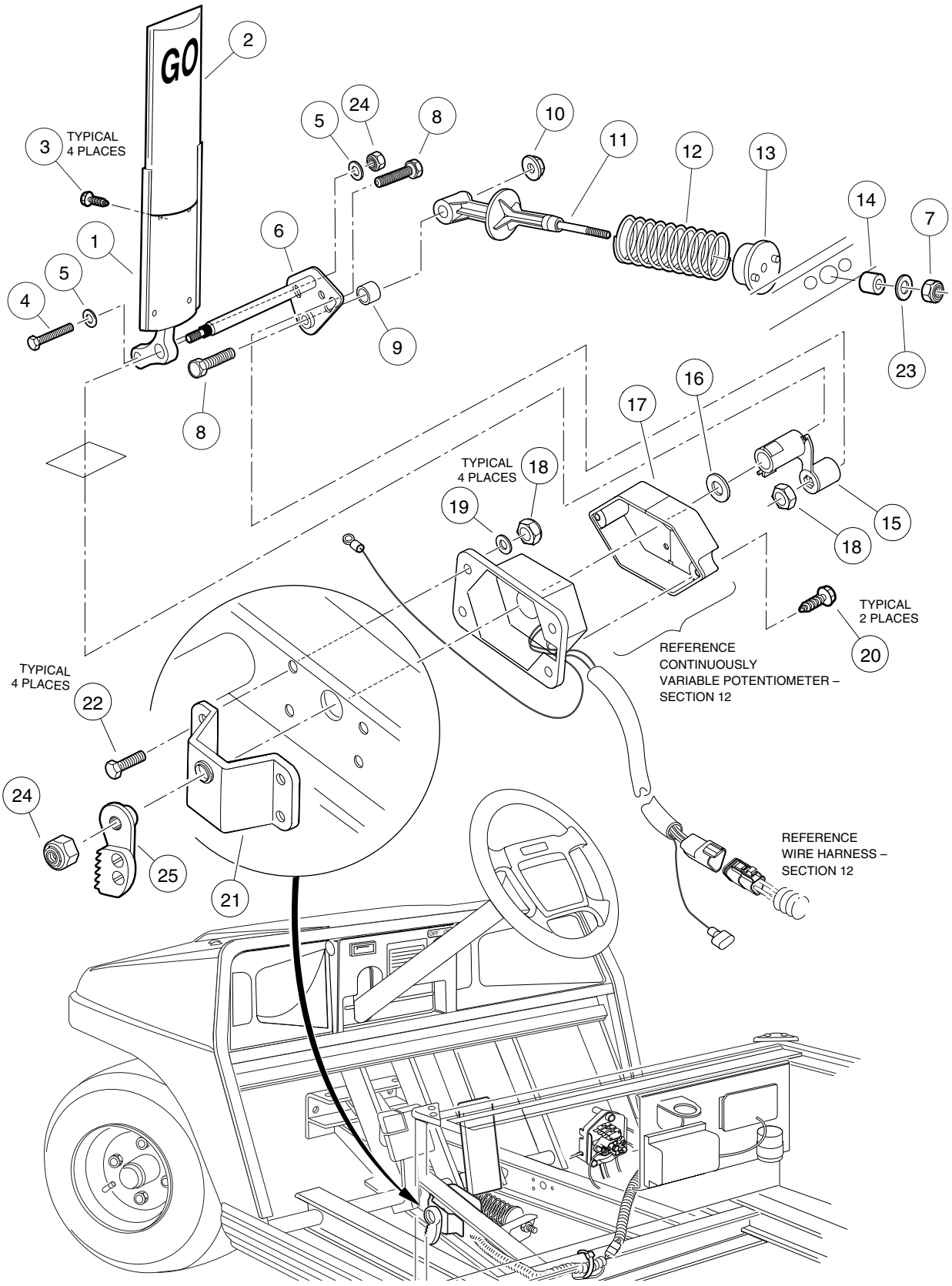
GO
TYPICAL 4 PLACES
TYPICAL 4 PLACES
TYPICAL 4 PLACES
TYPICAL 2 PLACES
REFERENCE CONTINUOUSLY VARIABLE POTENTIOMETER – SECTION 12
REFERENCE WIRE HARNESS – SECTION 12
1
2
3
4
5
6
7
8
9
10
11
12
13
14
15
16
17
18
19
20
21
22
23
24
25

ACCELERATOR PEDAL ASSEMBLY – ELECTRIC VEHICLES WITH POTENTIOMETER

ITEM	PART NO.	DESCRIPTION	QTY GAS	QTY ELEC
		1 2 3 4 The information on this page pertains to the following electric vehicles with serial numbers lower than 0112-001470: Villager 6, Villager 8, TransPorter 4, and TransPorter 6		
1	1017696	Sub-Assembly, Accelerator Pedal (includes items 2 and 3)		1
2	1013871	Pad, Accelerator Pedal		1
3	7716	Screw, Slotted Hex Washer-Head, #10-16 x 1/2		4
4	1624	Screw, Hex-Head Cap, 3/8-16 x 1-1/2		1
5	334	Washer, Flat, 3/8		2
6	102026001	Kit, Accelerator Pivot Rod		1
7	7473	Nut, Nylon Lock, 5/16-18		1
8	101862001	Screw, Hex-Head Cap, 1/4-20 x 1-3/8		2
9	1017424	Bearing, Pivot Support		1
10	1015661	Nut, Flange Lock, 1/4-20		1
11	101817401	Retainer, Spring		1
12	101796201	Spring, Return		1
13	1017378	Cup, Spring		1
14	1017380	Bumper, Return Spring		1
15	1017400	Lever, Actuator		1
16	101804201	Washer, Plastic, 1/2		1
17	1017743	Cover, Accelerator		1
18	8233	Nut, Nylon Lock, 1/4-20		5
19	1014007	Washer, Flat, Type B, 1/4		4
20	101804301	Screw, Hi-Lo Hex-Head, #8-18 x 1/2		2
21	1011694	Support, Accelerator Pivot Rod		1
22	101861901	Screw, Hex-Head Cap, 1/4-20 x 1-1/8		4
23	1241	Washer, Flat, 5/16		1
24	8754	Nut, Nylon Lock, 3/8 x 16		2
	101187702	Kit, Park Brake Latch (includes item 25, and items 22 - 26 on page 4-9)		1
25	N/A	Ratchet, Park Brake		1

4
G
E

STEERING, FRONT AND REAR SUSPENSION

5

G

E

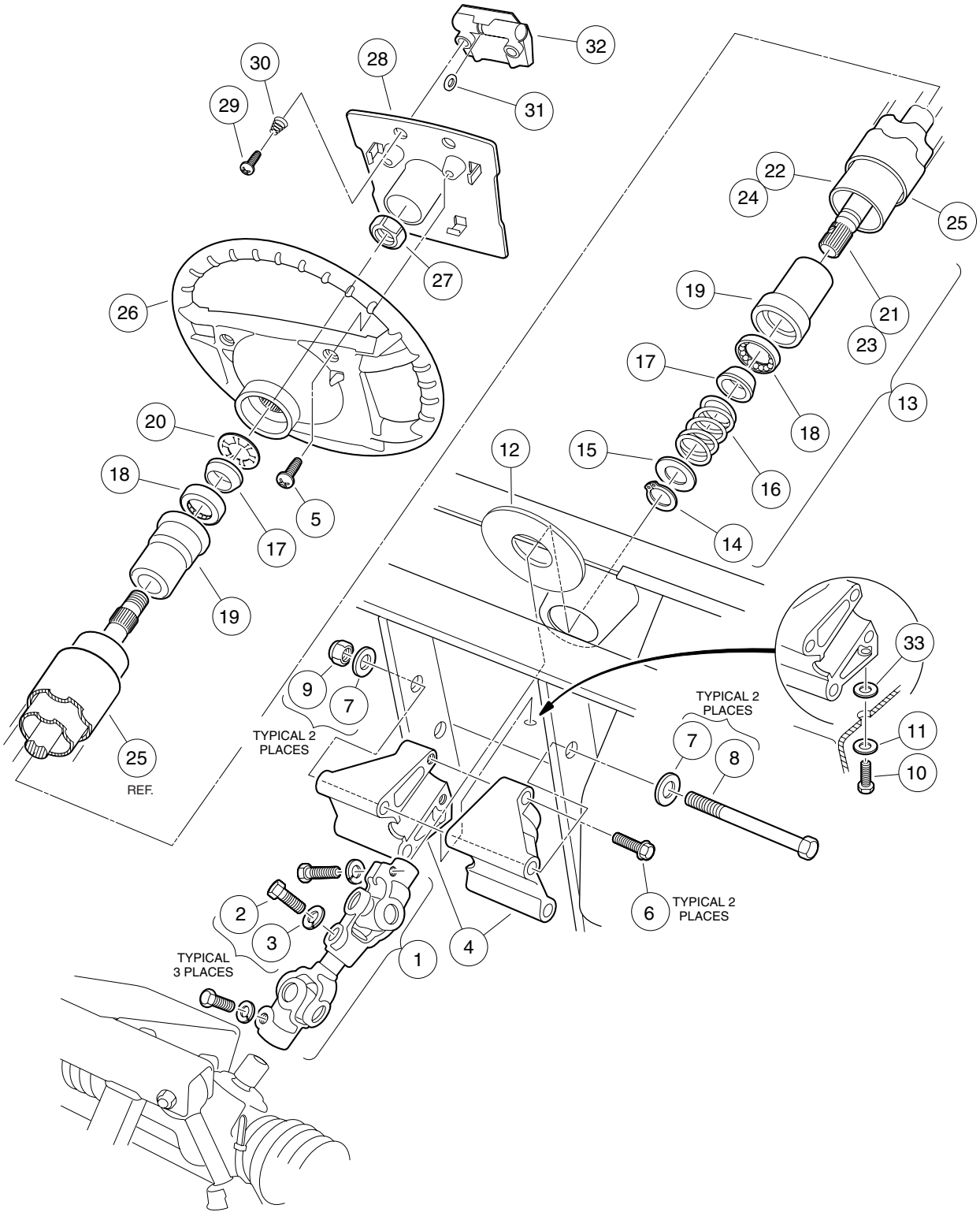
32
30
28
29
31
22
24
25
27
19
21
26
23
17
13
20
18
12
15
18
16
5
14
17
19
33
9
7
TYPICAL 2
PLACES
TYPICAL 2
PLACES
11
7
8
25
REF.
10
6
TYPICAL 2
PLACES
2
3
4
1
TYPICAL
3 PLACES

ITEM	PART NO.	DESCRIPTION	QTY GAS	QTY ELEC
		1 2 3 4		
1	1013861	Joint, Compound Steering (includes items 2 and 3)	1	1
2	1017226	Screw, Hex-Head Cap, M8 x 1.25 x 30 mm	3	3
3	7174	Washer, Lock, 5/16	3	3
4	101984801	Kit, Steering Column Mounting Bracket	1	1
5	1016663	Screw, Phillips, Type A, #12-11 x 5/8	2	2
6	1016269	Screw, Hex Washer-Head Thread-Forming, 5/16-18 x 2	2	2
7	334	Washer, Flat, 3/8	4	4
8	1016183	Screw, Hex-Head Cap, 3/8-16 x 7	2	2
9	8754	Nut, Nylon Lock, 3/8-16	2	2
10	1014288	Screw, Hex Washer-Head Thread-Forming, 5/16-18 x 3/4	1	1
11	1011697	Washer, Flat, 5/16	1	1
12	102278001	Boot, Steering Column	1	1
13	1016181	Assembly, Steering Column (Villager 4, TransPorter 4, and TransPorter 6 vehicles) (includes items 14 - 22)	1	1
13	1017313	Assembly, Steering Column (Villager 6 and Villager 8 vehicles) (includes items 14 - 20, 23, and 24)	1	1
14	1012605	Ring, Retaining	1	1
15	1012604	Washer, Steel, 5/8	1	1
16	1014217	Spring, Compression	1	1
17	1014125	Wedge	2	2
18	1014213	Assembly, Bearing	2	2
19	1014126	Seat, Bearing	2	2
20	1014214	Ring, Retaining	1	1
21	1015545	Shaft, Steering Column (Villager 4, TransPorter 4, and TransPorter 6 vehicles)	1	1
22	1016622	Column, Aluminum Steering (Villager 4, TransPorter 4, and TransPorter 6 vehicles)	1	1
23	1017315	Shaft, Steering Column (Villager 6 and Villager 8 vehicles)	1	1
24	1017314	Column, Aluminum Steering (Villager 6 and Villager 8 vehicles)	1	1
25	1017317	Cover, Steering Column	1	1
26	1016156	Wheel, Steering	1	1
27	1017273	Nut, Nylon Lock, 5/8-18	1	1
28	1016219	Assembly, Scorecard Plate (includes items 29 - 32)	1	1
29	1012565	Screw, Round-Head, #12-14 x 1	2	2
30	1012566	Spring, Tapered Compression	2	2
31	1016214	Grip, Pencil	1	1
32	1016154	Clip, Scorecard	1	1
33	1011578	Washer, Flat, Type B, 5/16 (Villager 6 and Villager 8 vehicles)	1	1
	1014216	Kit, Steering Column Rebuild (not shown)	A/R	A/R

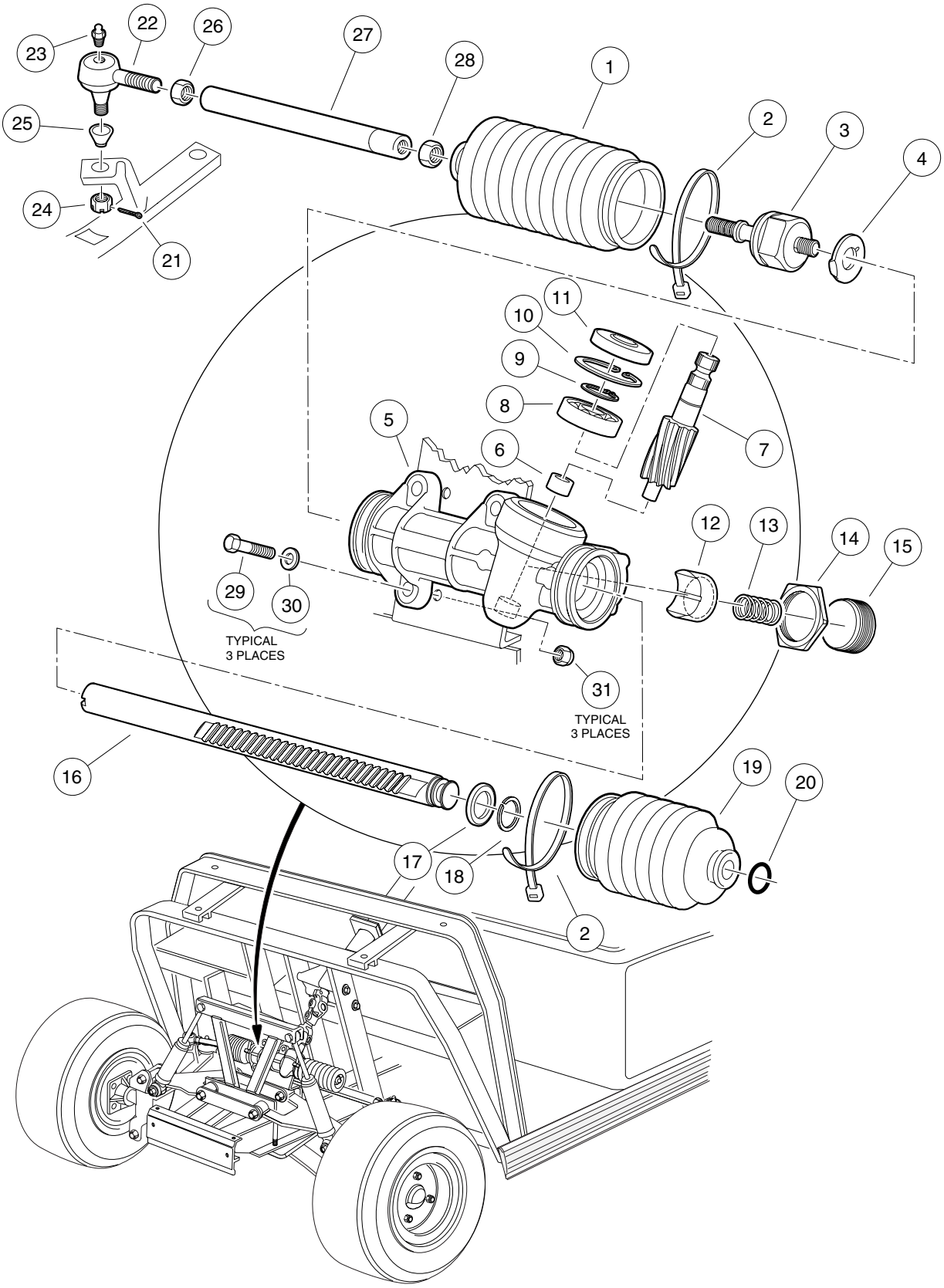
23
22
26
27
28
1
25
2
3
4
24
21
11
10
9
8
5
6
7
12
13
14
15
29
30
TYPICAL
3 PLACES
31
TYPICAL
3 PLACES
16
19
20
17
18
2

STEERING GEAR ASSEMBLY

ITEM	PART NO.	DESCRIPTION	QTY GAS	QTY ELEC
		1 2 3 4		
	101878302	Assembly, Steering Gear Box (includes items 1 - 20)	1	1
1	1013035	Seal, Dust, Passenger-Side	1	1
2	8990	Tie, Wire	2	2
3	101880201	Assembly, Inner Ball Joint	1	1
4	101880301	Washer, Tab	1	1
5	N/A	Box, Steering Gear	1	1
6	N/A	Bearing, Lower Pinion	1	1
7	N/A	Pinion, Steering	1	1
8	101879401	Bearing, Upper Pinion	1	1
9	101879901	Ring, C-Type Stop	1	1
10	1013051	Ring, Snap	1	1
11	1013052	Seal, Dust, Steering Pinion	1	1
12	101879701	Guide, Steering Rack	1	1
13	101879801	Spring, Yoke	1	1
14	1013044	Nut, Lock, Rack Screw	1	1
15	N/A	Screw, Rack Guide	1	1
16	N/A	Rack, Steering	1	1
17	101879501	Washer, Stop	1	1
18	101879601	Ring, C-Type Stop	1	1
19	101880001	Seal, Dust, Driver-Side	1	1
20	101880101	Ring, Retaining	1	1
21	1035	Pin, Cotter, 3/32 x 1	1	1
22	7540	Ball Joint, Left-Hand Thread (includes items 23, 24 and 25)	1	1
23	1015597	Fitting, Thread-Forming Grease, 1/4-28	1	1
24	7602	Nut, Hex Slotted, 3/8-24	1	1
25	1011930	Boot, Dust	1	1
26	7555	Nut, Hex, Left-Hand Thread, 1/2-20	1	1
27	1012467	Link, Rack and Pinion Drag	1	1
28	1013042	Nut, Hex, M12 x 1.75	1	1
29	1624	Screw, Hex-Head Cap, 3/8-16 x 1-1/2	3	3
30	334	Washer, Flat, 3/8	3	3
31	8754	Nut, Nylon Lock, 3/8-16	3	3

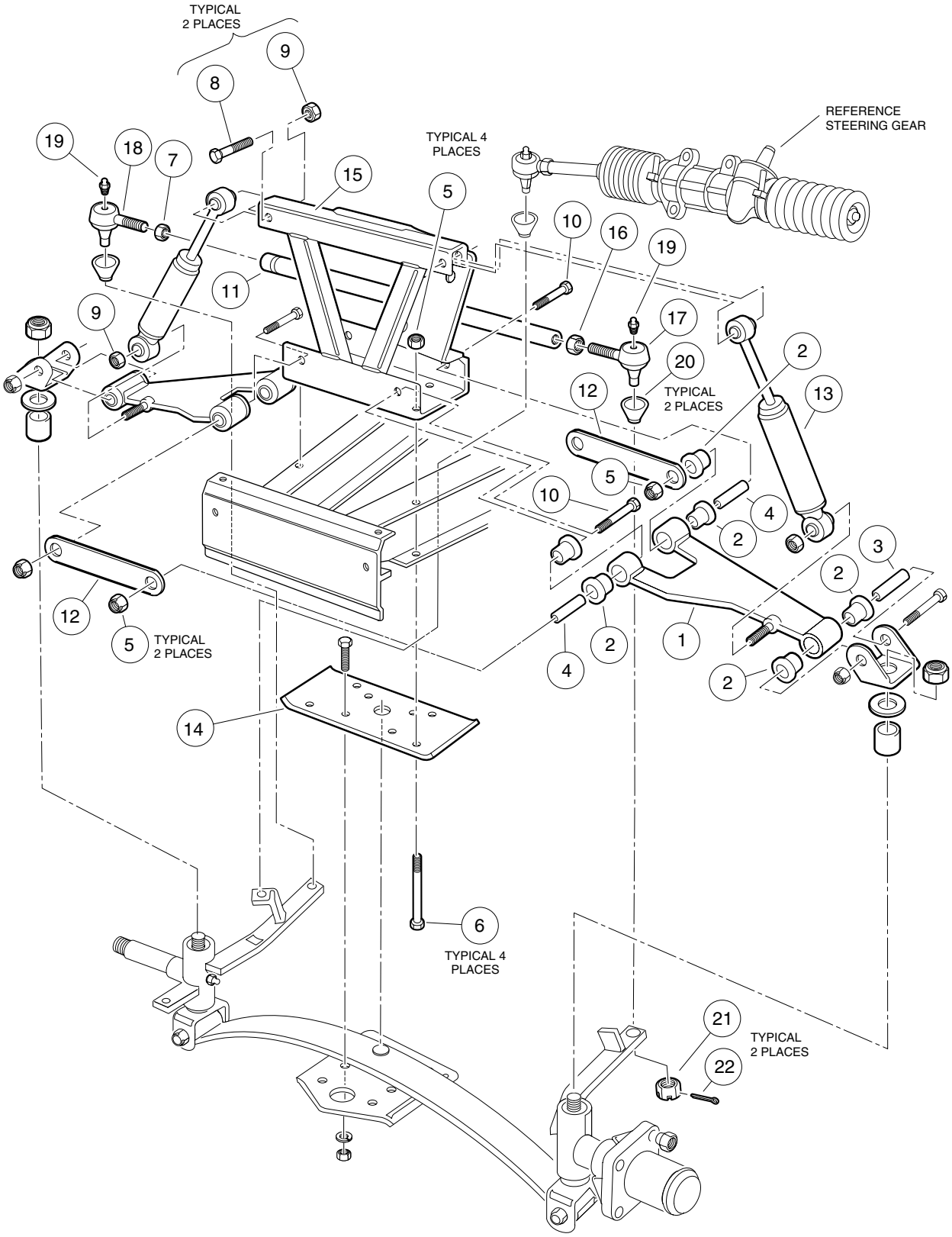
TYPICAL
2 PLACES
9
8
19
18
7
15
TYPICAL 4
PLACES
5
REFERENCE
STEERING GEAR
10
16
19
11
9
17
20
TYPICAL
2 PLACES
2
12
13
5
10
4
2
3
2
12
5
TYPICAL
2 PLACES
4
2
1
2
14
6
TYPICAL 4
PLACES
21
22
TYPICAL
2 PLACES

FRONT SUSPENSION, UPPER – VILLAGER 4

ITEM	PART NO.	DESCRIPTION	QTY GAS	QTY ELEC
		1 2 3 4		
1	1016353	Assembly, Delta A-Plate (includes items 2, 3 and 4)	2	2
2	1016346	Bushing, Urethane	6	6
3	1016350	Sleeve, Delta Outer	1	1
4	1016349	Sleeve, Delta Inner	2	2
5	8754	Nut, Nylon Lock, 3/8-16	11	11
6	101870501	Screw, Hex-Head Cap, 3/8-16 x 4-3/4	4	4
7	1308	Nut, Hex, 1/2-20	1	1
8	8861	Screw, Hex-Head Cap, 3/8-16 x 1-3/4	2	2
9	1010138	Nut, Dimpled Lock, 3/8-16	4	4
10	2402	Screw, Hex-Head Cap, 3/8-16 x 2-1/4	4	4
11	1010219	Rod, Tie	1	1
12	1017266	Strap, A-Plate	2	2
13	101870601	Shock Absorber, Front	2	2
14	1010124	Plate, Spring Mounting	1	1
15	1016385	Assembly, Delta Shock and Gear Support	1	1
16	7555	Nut, Hex, Left-Hand Thread, 1/2-20	1	1
17	7540	Ball Joint, Left-Hand Thread (includes items 19 - 21)	1	1
18	7539	Ball Joint (includes items 19 - 21)	1	1
19	1015597	Fitting, Thread-Forming Grease, 1/4-28	1	1
20	1011930	Seal, Dust	1	1
21	7602	Nut, Slotted Hex, 3/8-24	1	1
22	1035	Pin, Cotter, 3/32 x 1	2	2

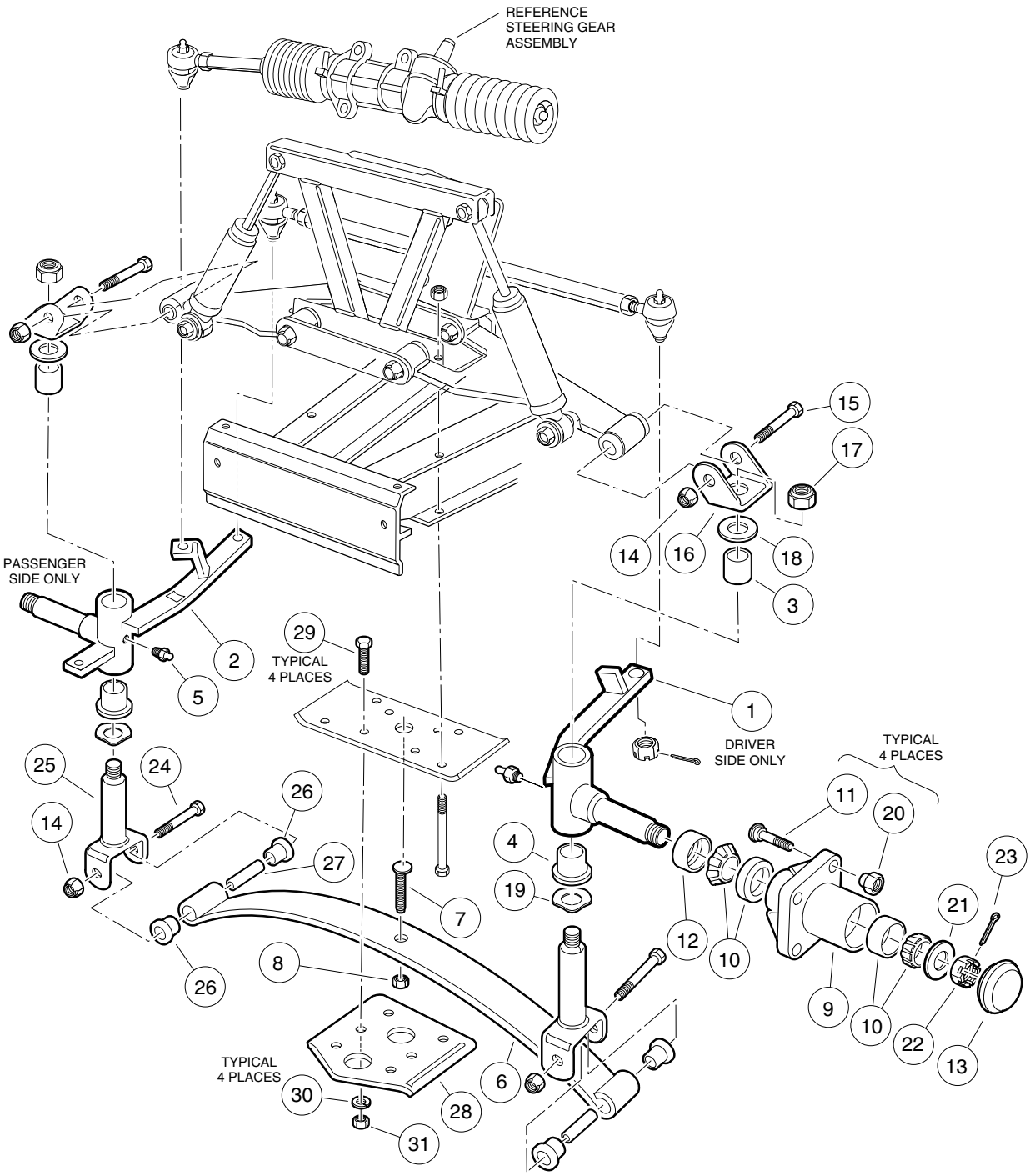
REFERENCE
STEERING GEAR
ASSEMBLY
PASSENGER
SIDE ONLY
DRIVER
SIDE ONLY
TYPICAL
4 PLACES
TYPICAL
4 PLACES
TYPICAL
4 PLACES
1
2
3
4
5
6
7
8
9
10
11
12
13
14
15
16
17
18
19
20
21
22
23
24
25
26
27
28
29
30
31

FRONT SUSPENSION, LOWER – VILLAGER 4

ITEM	PART NO.	DESCRIPTION	QTY GAS	QTY ELEC
		1 2 3 4		
1	101876901	Assembly, Spindle, Driver-Side (includes items 3, 4 and 5)	1	1
2	101877001	Assembly, Spindle, Passenger-Side (includes items 3, 4 and 5)	1	1
3	8067	Bushing, Bronze Spindle	1	1
4	7048	Bushing, Bronze	1	1
5	1015597	Fitting, Grease, 1/4-28	1	1
6	1012030	Spring, Tapered Leaf	1	1
7	8745	Screw, Eccentric Adjustment	1	1
8	706	Nut, Hex, 3/8-16	1	1
9	1011892	Assembly, Hub (includes items 10 - 13)	2	2
10	1011393	Package, Hub Bearing	2	2
11	1011304	Stud, Lug, 1/2-20	4	4
12	1013135	Seal, Double Lip	1	1
13	1011887	Cover, Dust	1	1
14	8754	Nut, Nylon Lock, 3/8-16	4	4
15	1016387	Screw, Hex-Head Cap, 3/8-16 x 2-3/4	2	2
16	1016384	Clevis, Upper Delta	2	2
17	101903101	Nut, Nylon Lock, 1/2-20	2	2
18	1010150	Bearing, Thrust	2	2
19	1016389	Washer, Kingpin Wave	2	2
20	1010984	Nut, Lug	8	8
21	1010005	Washer, Flat, 3/4	2	2
22	7840	Nut, Hex Slotted, 3/4-16	2	2
23	7910	Pin, Cotter, 5/32 x 1	2	2
24	8755	Screw, Hex-Head Cap, 3/8-16 x 3-3/8	2	2
25	1016386	Kingpin	2	2
26	1015583	Bushing, Urethane	4	4
27	1012303	Bushing, Steel	2	2
28	1014276	Plate, Front Spring Retainer	1	1
29	1010177	Screw, Hex-Head Cap, 3/8-16 x 2	4	4
30	357	Washer, Lock, 3/8	4	4
31	706	Nut, Hex, 3/8-16	4	4

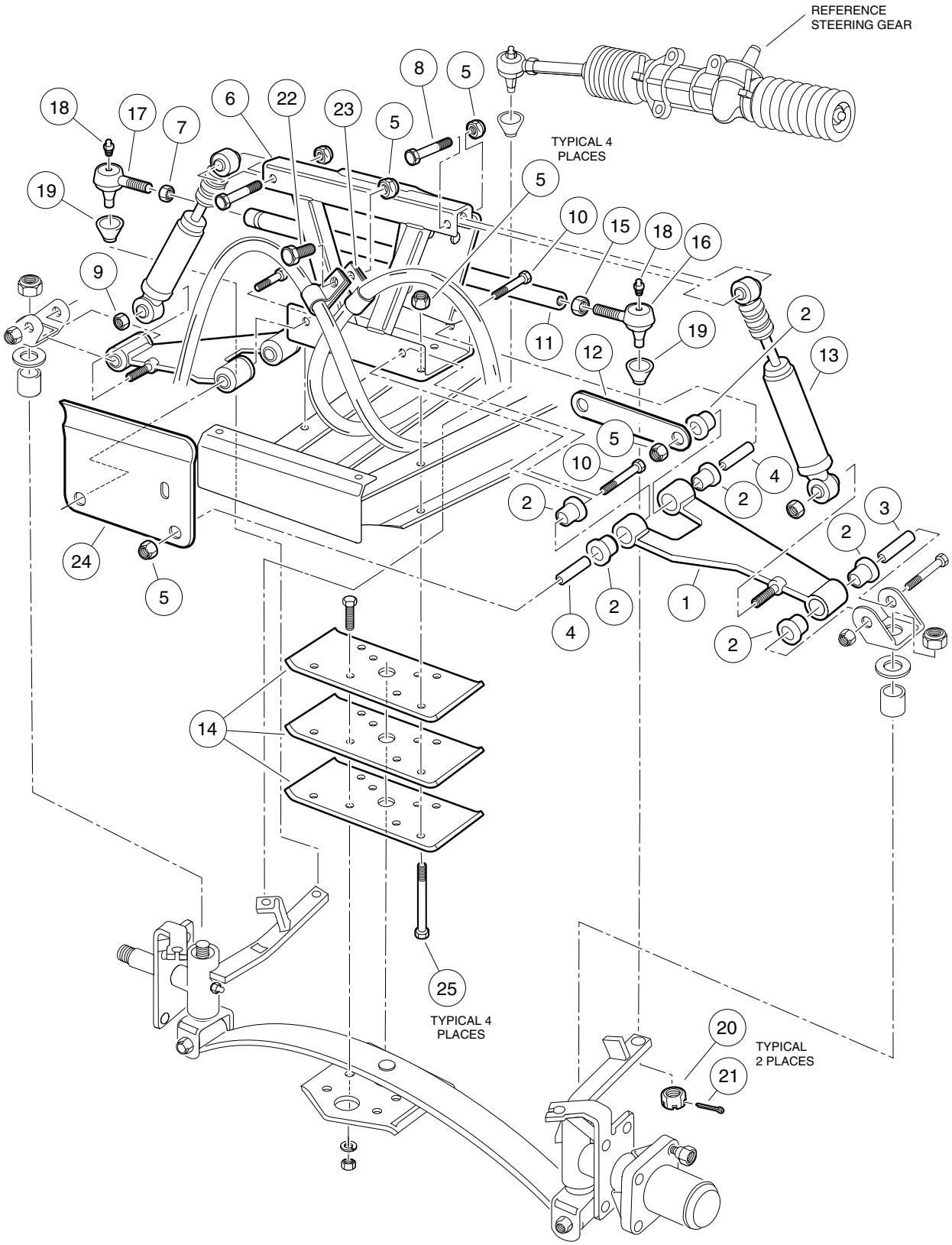
REFERENCE
STEERING GEAR
TYPICAL 4
PLACES
TYPICAL 4
PLACES
TYPICAL
2 PLACES
1
2
3
4
5
6
7
8
9
10
11
12
13
14
15
16
17
18
19
20
21
22
23
24
25

FRONT SUSPENSION, UPPER – VILLAGER 6, VILLAGER 8, TRANSPORTER 4, AND TRANSPORTER 6

ITEM	PART NO.	DESCRIPTION	QTY GAS	QTY ELEC
		1 2 3 4		
1	1016353	Assembly, Delta A-Plate (includes items 2, 3 and 4)	2	2
2	1016346	Bushing, Urethane	6	6
3	1016350	Sleeve, Delta Outer	1	1
4	1016349	Sleeve, Delta Inner	2	2
5	8754	Nut, Nylon Lock, 3/8-16	13	13
6	1016385	Assembly, Delta Shock and Gear Support	1	1
7	1308	Nut, Hex, 1/2-20	1	1
8	8861	Screw, Hex-Head Cap, 3/8-16 x 1-3/4	2	2
9	1010138	Nut, Dimpled Lock, 3/8-16	2	2
10	2402	Screw, Hex-Head Cap, 3/8-16 x 2-1/4	4	4
11	1010219	Rod, Tie	1	1
12	1017266	Strap, A-Plate	2	2
13	101870601	Shock Absorber, Front	2	2
14	1010124*	Plate, Spring Mounting	1	*
15	7555	Nut, Hex, Left-Hand Thread, 1/2-20	1	1
16	7540	Ball Joint, Left-Hand Thread (includes items 18 - 20)	1	1
17	7539	Ball Joint (includes items 18 - 20)	1	1
18	1015597	Fitting, Thread-Forming Grease, 1/4-28	1	1
19	1011930	Seal, Dust	1	1
20	7602	Nut, Slotted Hex, 3/8-24	1	1
21	1035	Pin, Cotter, 3/32 x 1	2	2
22	320	Screw, Hex-Head Cap, 3/8-16 x 1	1	1
23	101935301	Clamp, Brake Cable (part of brake cable assembly)	2	2
24	101955001	Bracket, Brake Cable Guide	1	1
25	101870501	Screw, Hex-Head Cap, 3/8-16 x 4-3/4	4	4

* Villager electric vehicles use a quantity of 1.
TransPorter electric vehicles use a quantity of 3.

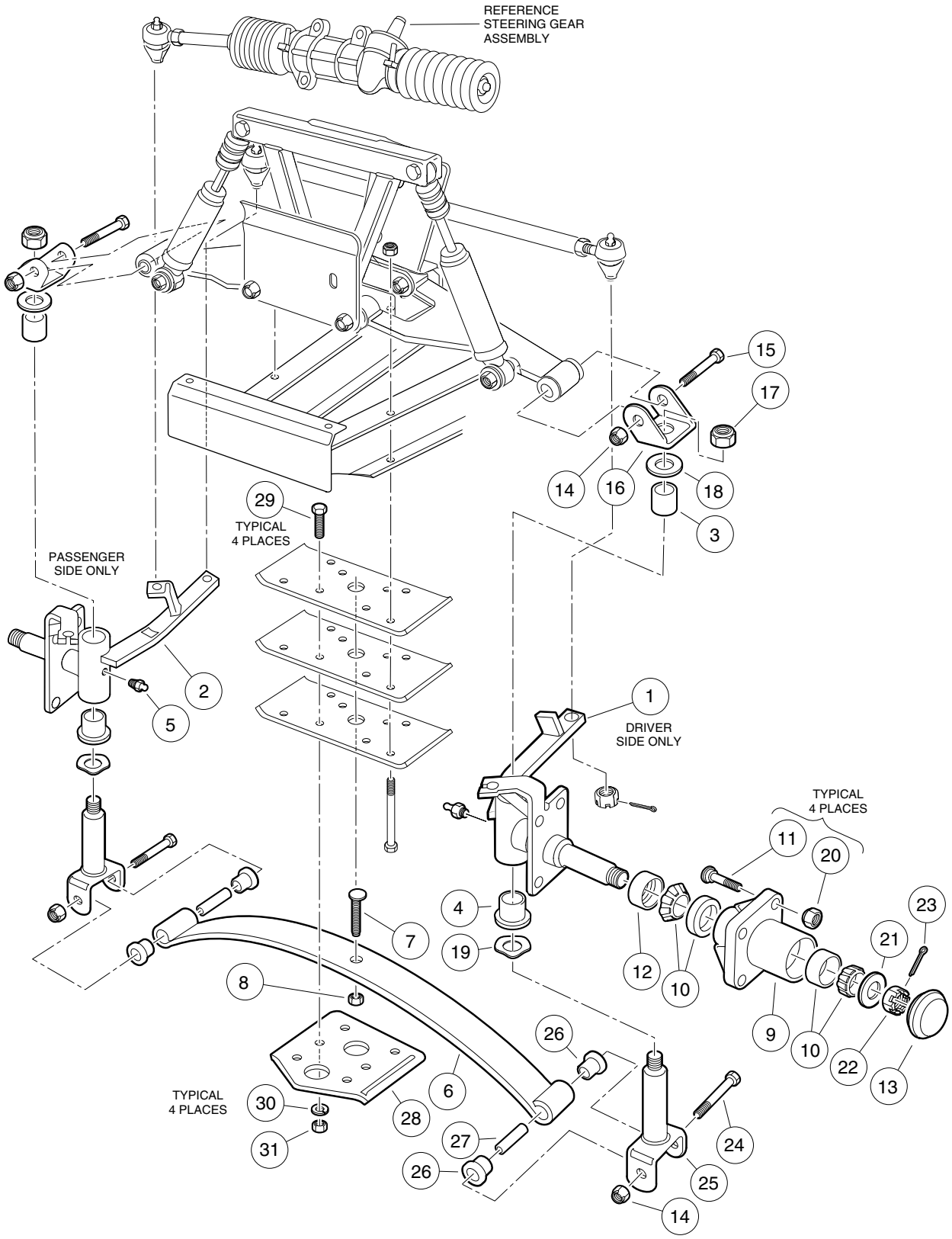
REFERENCE
STEERING GEAR
ASSEMBLY
PASSENGER
SIDE ONLY
TYPICAL
4 PLACES
DRIVER
SIDE ONLY
TYPICAL
4 PLACES
TYPICAL
4 PLACES
1
2
3
4
5
6
7
8
9
10
11
12
13
14
15
16
17
18
19
20
21
22
23
24
25
26
27
28
29
30
31

FRONT SUSPENSION, LOWER – VILLAGER 6, VILLAGER 8, TRANSPORTER 4, AND TRANSPORTER 6

ITEM	PART NO.	DESCRIPTION	QTY GAS	QTY ELEC
		1 2 3 4		
1	101876901	Assembly, Spindle, Driver-Side (includes items 3, 4 and 5)	1	1
2	101877001	Assembly, Spindle, Passenger-Side (includes items 3, 4 and 5)	1	1
3	8067	Bushing, Bronze Spindle	1	1
4	7048	Bushing, Bronze	1	1
5	1015597	Fitting, Grease, 1/4-28	1	1
6	1012030	Spring, Tapered Leaf (1-leaf) (TransPorter electric vehicles)		1
6	102004001	Spring, Tapered Leaf (2-leaf) (all Villager 6 vehicles and TransPorter gasoline vehicles)	1	1
6	102197901	Spring, Tapered Leaf (3-leaf) (all Villager 8 vehicles)	1	1
7	8745	Screw, Eccentric Adjustment	1	1
8	706	Nut, Hex, 3/8-16	1	1
9	1011892	Assembly, Hub (includes items 10 - 13)	2	2
10	1011393	Package, Hub Bearing	2	2
11	1011304	Stud, Lug, 1/2-20	4	4
12	1013135	Seal, Double Lip	1	1
13	1011887	Cover, Dust	1	1
14	8754	Nut, Nylon Lock, 3/8-16	4	4
15	1016387	Screw, Hex-Head Cap, 3/8-16 x 2-3/4	2	2
16	1016384	Clevis, Upper Delta	2	2
17	101903101	Nut, Nylon Lock, 1/2-20	2	2
18	1010150	Bearing, Thrust	2	2
19	1016389	Washer, Kingpin Wave	2	2
20	1010984	Nut, Lug	8	8
21	1010005	Washer, Flat, 3/4	2	2
22	7840	Nut, Hex Slotted, 3/4-16	2	2
23	7910	Pin, Cotter, 5/32 x 1	2	2
24	8755	Screw, Hex-Head Cap, 3/8-16 x 3-3/8	2	2
25	1016386	Kingpin	2	2
26	1015583	Bushing, Urethane	4	4
27	1012303	Bushing, Steel	2	2
28	1014276	Plate, Front Spring Retainer	1	1
29	1010177	Screw, Hex-Head Cap, 3/8-16 x 2	4	4
30	357	Washer, Lock, 3/8	4	4
31	706	Nut, Hex, 3/8-16	4	4

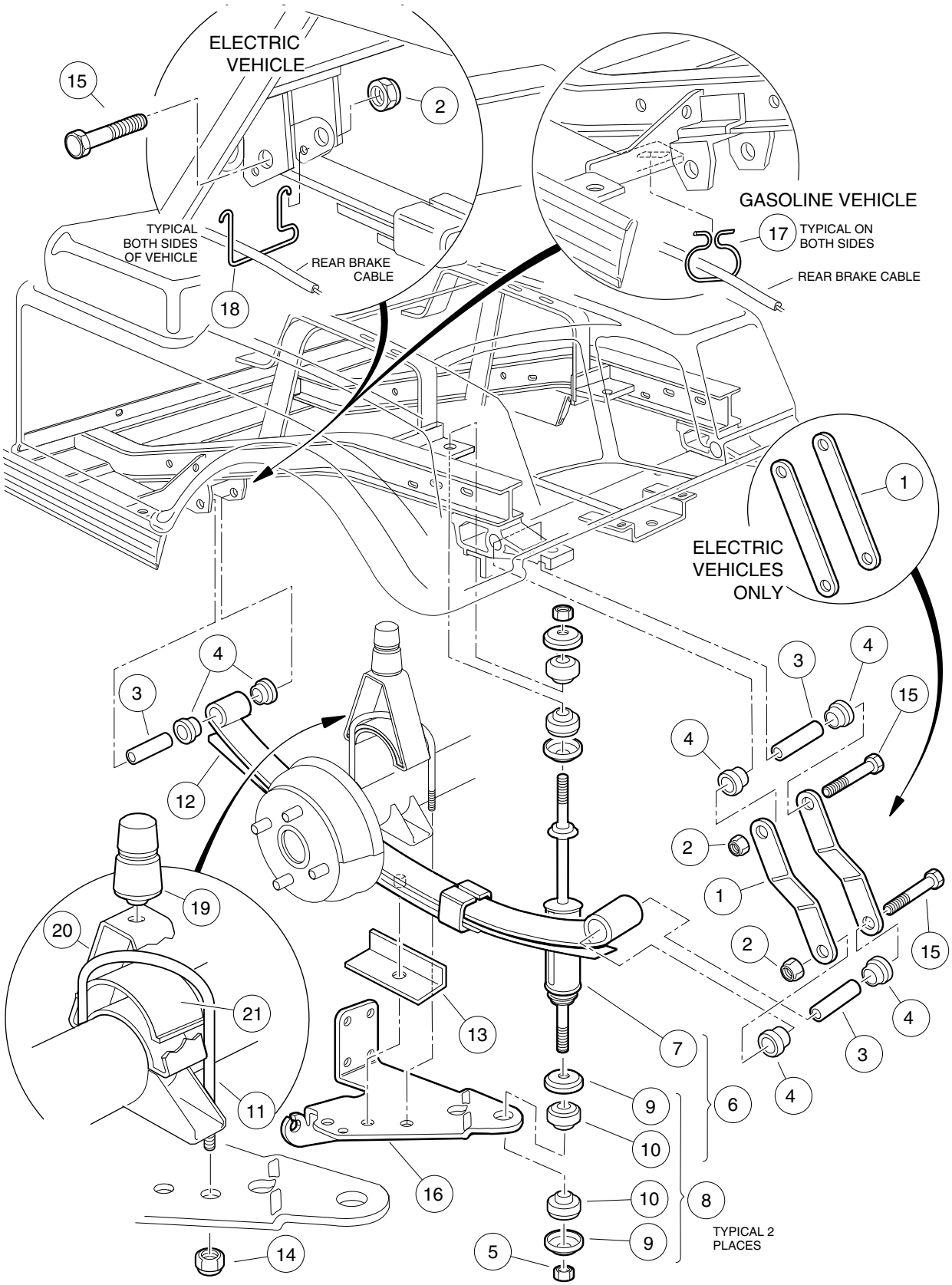
ELECTRIC VEHICLE
GASOLINE VEHICLE
TYPICAL BOTH SIDES OF VEHICLE
REAR BRAKE CABLE
TYPICAL ON BOTH SIDES
REAR BRAKE CABLE
ELECTRIC VEHICLES ONLY
TYPICAL 2 PLACES
15
2
18
17
1
4
3
12
19
20
21
11
13
7
6
9
10
8
16
14
5

ITEM	PART NO.	DESCRIPTION	QTY GAS	QTY ELEC
		1 2 3 4		
1	7569	Shackle, Rear Spring (electric vehicle only)		4
1	1012304	Shackle, Rear Spring (gasoline vehicle only)	4	
2	8754	Nut, Nylon Lock, 3/8-16	6	6
3	1012303	Bushing, Steel	6	6
4	1015583	Bushing, Urethane	12	12
5	1010145	Nut, UNF Hex, 3/8-24	4	4
6	1013164	Kit, Shock Absorber (includes items 7, 9 and 10)	1	1
7	1014236	Shock Absorber, Rear	2	2
8	1011415	Kit, Shock Absorber Cushion (includes 2 each of items 9 and 10)	4	4
9	N/A	Retainer, Shock Absorber Cushion	8	8
10	N/A	Cushion, Shock Absorber	8	8
11	1014902	U-Bolt	2	2
12	1014675	Spring, Rear Leaf	2	2
13	1014573	Retainer, Spring	2	2
14	1014555	Nut, Nylon Lock, 7/16-24	4	4
15	8755	Screw, Hex-Head Cap, 3/8-16 x 3-3/8	6	6
16	1012182	Pad, Spring, Driver-Side	1	1
16	1012181	Pad, Spring, Passenger-Side	1	1
17	101900801	Hanger, Brake Cable (gasoline vehicle only)	2	
18	1013207	Hanger, Brake Cable (electric vehicle only)		2
19	1017235	Bumper, Jounce	2	2
20	101454602	Mount, Bumper (gasoline vehicle only)	2	
20	101454902	Mount, Bumper (electric vehicle only)		2
21	1014901	Spacer, Overload Bumper	2	2

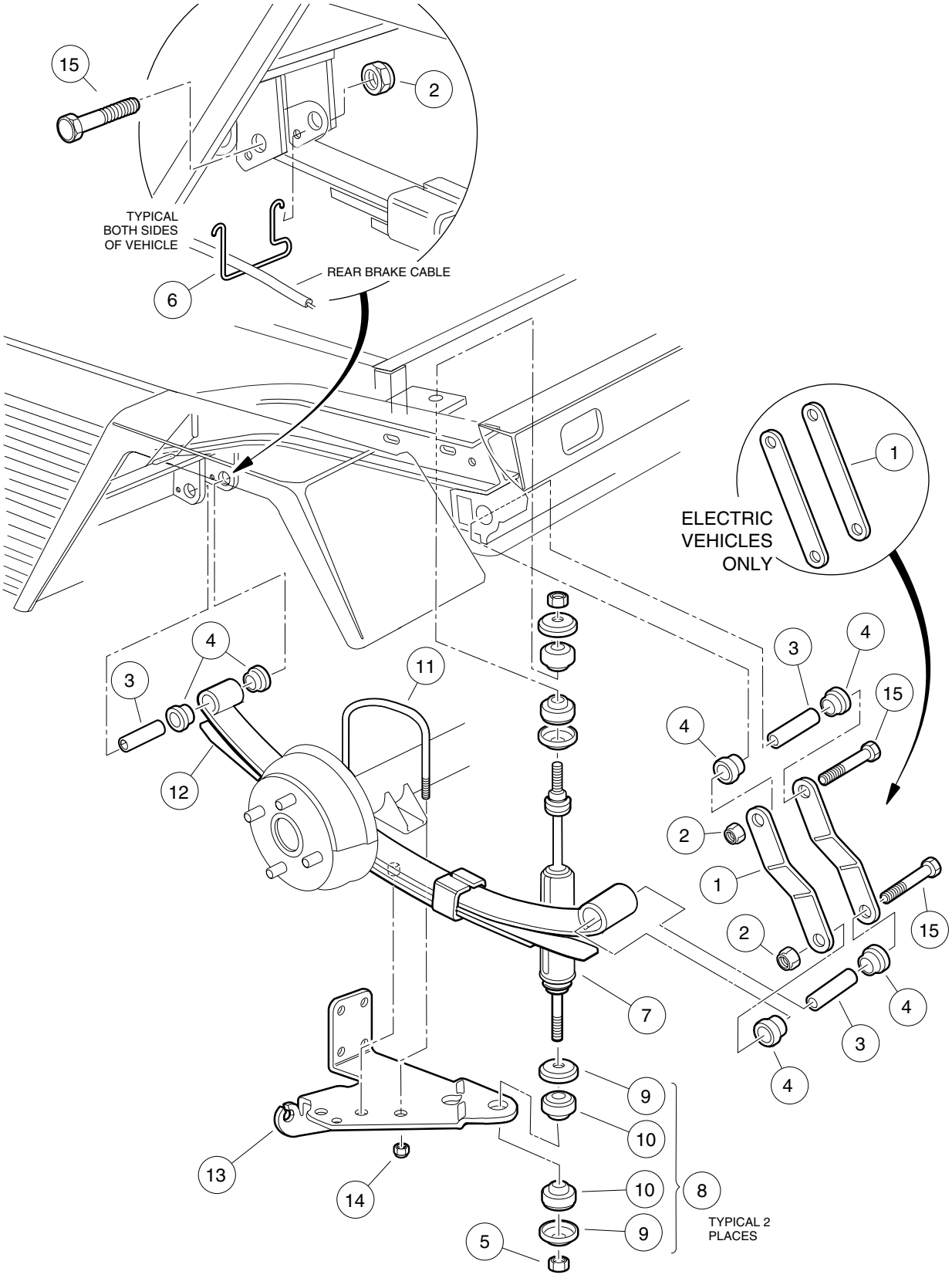
15
2
TYPICAL
BOTH SIDES
OF VEHICLE
REAR BRAKE CABLE
6
1
ELECTRIC
VEHICLES
ONLY
4
3
11
12
15
2
7
9
10
13
14
8
TYPICAL 2
PLACES
5

REAR SUSPENSION – VILLAGER 6, VILLAGER 8, TRANSPORTER 4, AND TRANSPORTER 6

ITEM	PART NO.	DESCRIPTION	QTY GAS	QTY ELEC
		1 2 3 4		
1	7569	Shackle, Rear Spring (electric vehicle only)		4
1	1012304	Shackle, Rear Spring (gasoline vehicle only)	4	
2	8754	Nut, Nylon Lock, 3/8-16	6	6
3	1012303	Bushing, Steel	6	6
4	1015583	Bushing, Urethane	12	12
5	1010145	Nut, UNF Hex, 3/8-24	4	4
6	1013207	Hanger, Brake Cable	2	2
7	101975101	Shock Absorber, Rear	2	2
8	1011415	Kit, Shock Absorber Cushion (includes 2 each of items 9 and 10)	4	4
9	N/A	Retainer, Shock Absorber Cushion	8	8
10	N/A	Cushion, Shock Absorber	8	8
11	1014902	U-Bolt	2	2
12	101975201	Spring, Rear Leaf	2	2
13	101926501	Pad, Spring, Driver-Side	1	1
13	101929401	Pad, Spring, Passenger-Side	1	1
14	1014555	Nut, Nylon Lock, 7/16-24	4	4
15	8755	Screw, Hex-Head Cap, 3/8-16 x 3-3/8	6	6

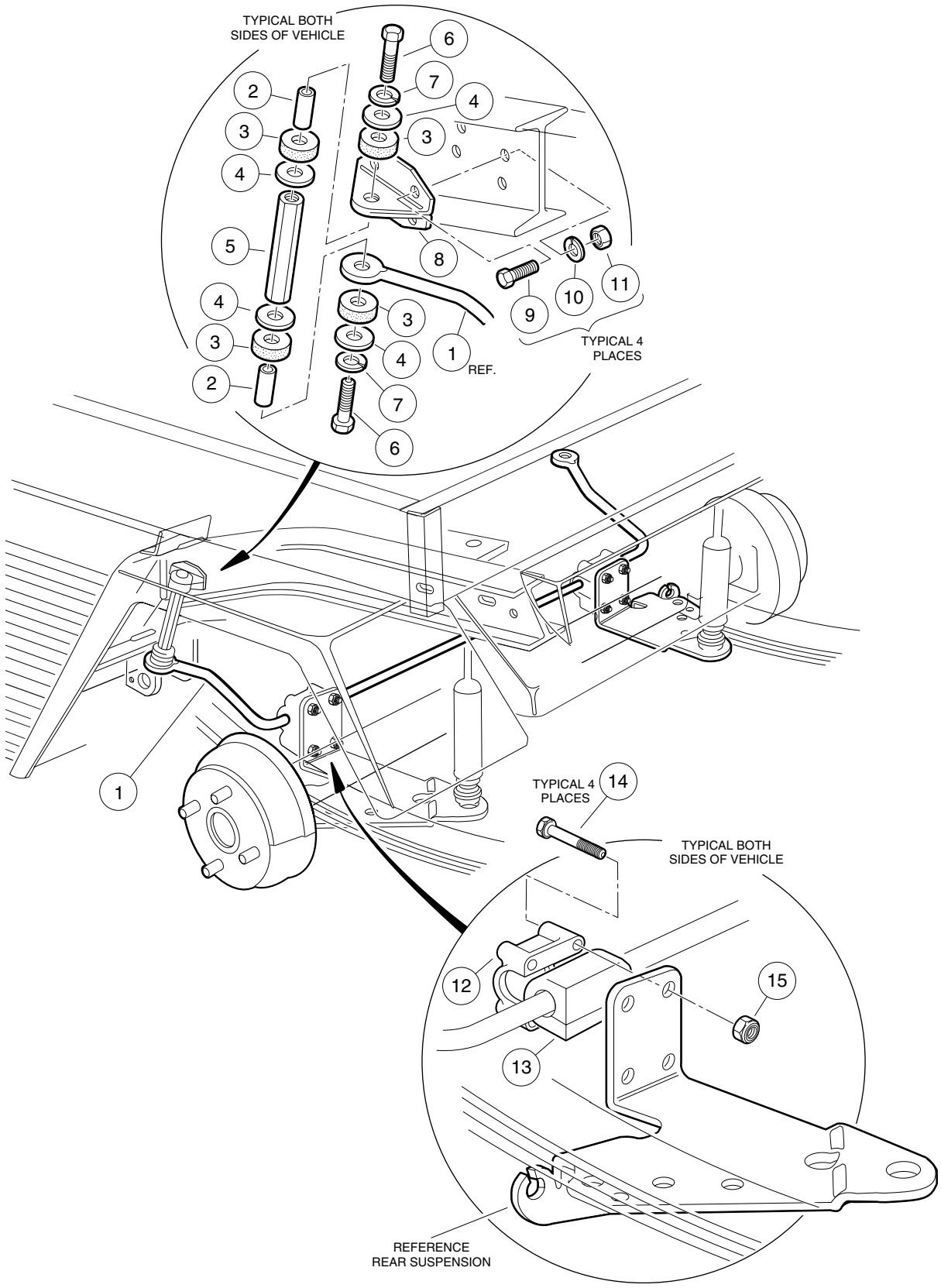
TYPICAL BOTH SIDES OF VEHICLE
TYPICAL 4 PLACES
REF.
TYPICAL 4 PLACES
TYPICAL BOTH SIDES OF VEHICLE
REFERENCE REAR SUSPENSION

STABILIZER BAR – GASOLINE VILLAGER 6, VILLAGER 8, TRANSPORTER 4, AND TRANSPORTER 6

ITEM	PART NO.	DESCRIPTION	QTY GAS	QTY ELEC
		1 2 3 4		
1	1015760	Bar, Stabilizer, 3/4 Diameter	1	
2	1015457	Spacer	4	
3	1015453	Mount, Compression	8	
4	808	Washer, Flat, 3/8	8	
5	1016814	Link, Stabilizer Bar	2	
6	8861	Screw, Hex-Head Cap, 3/8-16 x 1-3/4	4	
7	357	Washer, Lock, 3/8	4	
8	1016813	Bracket, Stabilizer Bar Mounting	2	
9	7173	Screw, Hex-Head Cap, 5/16-18 x 3/4	8	
10	7174	Washer, Lock, 5/16	8	
11	1242	Nut, Hex, 5/16-18	8	
12	1015614	Support, Stabilizer Bar Bushing	2	
13	1015613	Bushing, Stabilizer Bar	2	
14	7311	Screw, Hex-Head Cap, 1/4-20 x 2	8	
15	8233	Nut, Nylon Lock, 1/4-20	8	

5
G
E

ELECTRICAL SYSTEM – GASOLINE VEHICLE

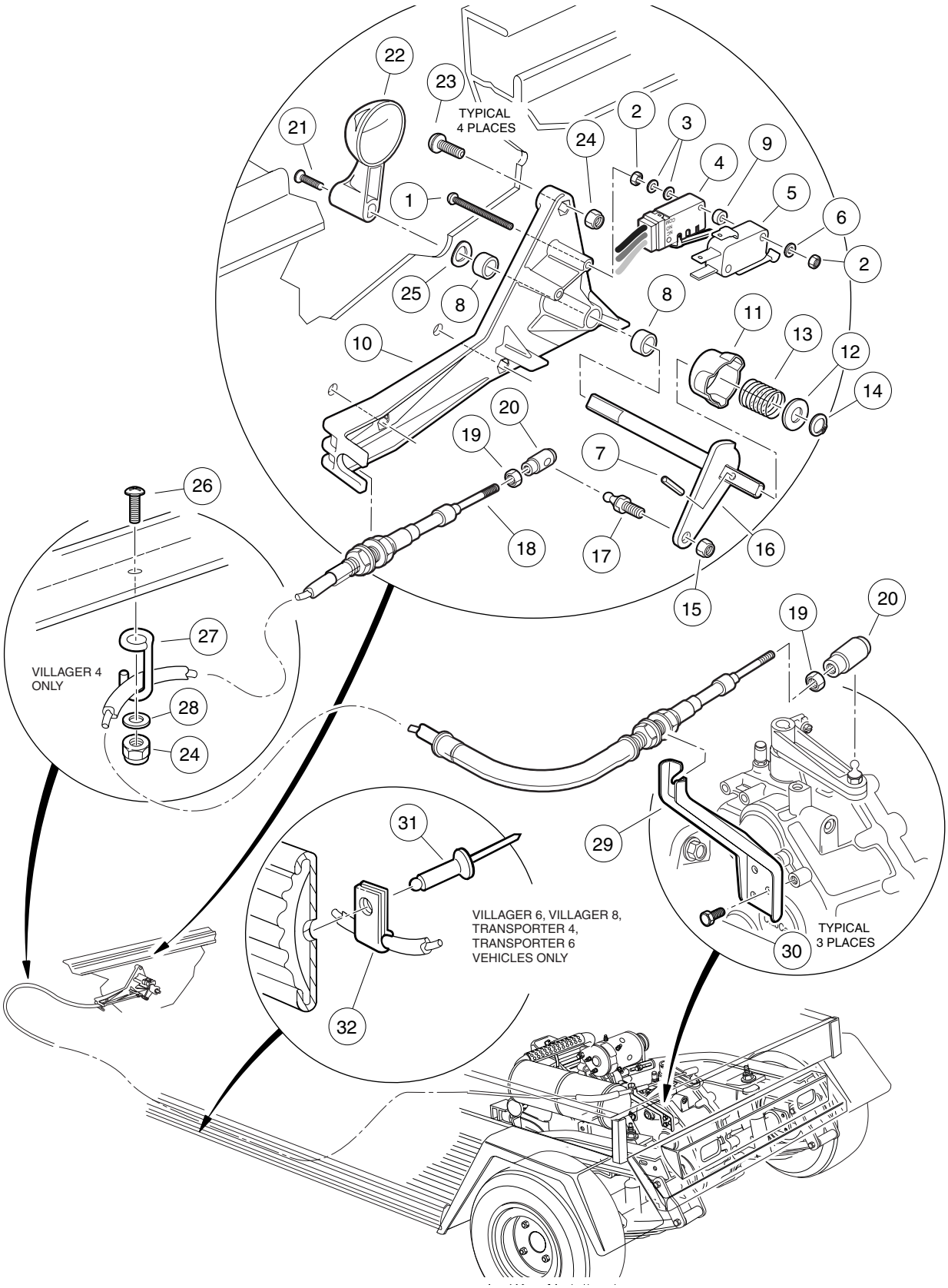
22
23
TYPICAL
4 PLACES
21
24
2
3
4
9
1
5
6
2
25
8
8
11
13
12
10
14
20
19
7
26
18
17
16
15
19
20
27
VILLAGER 4
ONLY
28
24
31
29
VILLAGER 6, VILLAGER 8,
TRANSPORTER 4,
TRANSPORTER 6
VEHICLES ONLY
TYPICAL
3 PLACES
30
32

FORWARD/REVERSE SHIFTER ASSEMBLY – GASOLINE VEHICLE

ITEM	PART NO.	DESCRIPTION	QTY
		1 2 3 4	
	1016947	Assembly, Forward/Reverse Shifter (includes items 1 - 17)	1
1	1012594	Screw, Machine, #4-40 x 1-1/2	2
2	8057	Nut, Hex-Head, #4-40	4
3	1012431	Washer, Flat, #4	4
4	101979101	Switch, Limit	1
5	1014807	Switch, Limit	1
6	8058	Washer, Lock, #4	2
7	1013591	Pin, Roll, 1/8	1
8	1014145	Bushing, Bronze	2
9	1014727	Washer, Nylon Flat, #4	2
10	1016342	Base, Forward/Reverse Shifter	1
11	1014089	Kit, Neutral Lock-Out Cam (includes item 12)	1
12	1014065	Washer, Flat	1
13	1013590	Spring, Forward/Reverse Cam	1
14	1013589	Ring, Retaining	1
15	8717	Nut, Nylon Lock, 1/4-28	1
16	1013587	Weldment, Forward/Reverse Bell Crank	1
17	1010954	Stud, Ball, 1/4-28 x 1/4	1
18	101951501	Cable, Transmission (includes items 19 and 20) (Villager 4)	1
18	101672701	Cable, Transmission (includes items 19 and 20) (Villager 6, TransPorter 4, and TransPorter 6)	1
18	101672702	Cable, Transmission (includes items 19 and 20) (Villager 8)	1
19	7893	Nut, Hex, #10-32	2
20	1012333	Joint, Ball	2
21	1015064	Screw, Oval Countersunk Machine, #8-32 x 5/8	1
22	1012987	Handle, Forward/Reverse Switch	1
23	8248	Screw, Phillips Truss-Head, 1/4-20 x 3/4	4
24	8233	Nut, Nylon Lock, 1/4-20	5
25	1016201	Washer, Wave, 3/8	1
26	8251	Screw, Phillips Head, 1/4-20 x 1 (Villager 4 only)	1
27	101855801	Retainer, Cable (Villager 4 only)	1
28	332	Washer, Flat, 1/4 (Villager 4 only)	1
29	102045901	Bracket, Transmission Cable Support	1
30	1012285	Screw, Thread-Rolling, 1/4-20 x 5/8	3
31	7973	Rivet, Pop, 3/16 (Villager 6, Villager 8, TransPorter 4, and TransPorter 6)	1
32	8455	Clamp (Villager 6, Villager 8, TransPorter 4, and TransPorter 6)	1

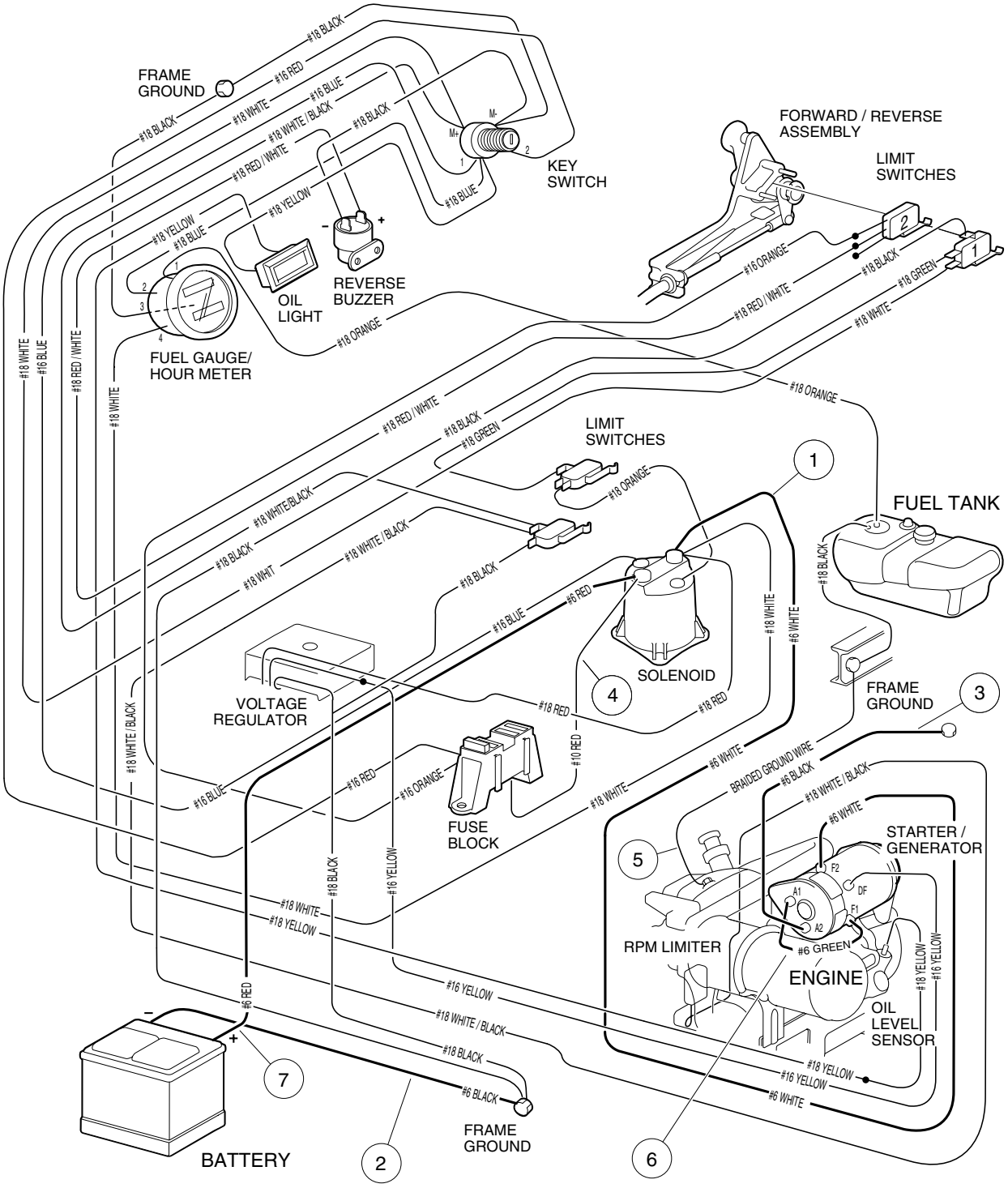
FRAME GROUND
KEY SWITCH
FORWARD / REVERSE ASSEMBLY
LIMIT SWITCHES
REVERSE BUZZER
OIL LIGHT
FUEL GAUGE/ HOUR METER
LIMIT SWITCHES
FUEL TANK
SOLENOID
VOLTAGE REGULATOR
FRAME GROUND
FUSE BLOCK
STARTER / GENERATOR
RPM LIMITER
ENGINE
OIL LEVEL SENSOR
BATTERY
FRAME GROUND
#18 BLACK
#16 RED
#18 WHITE
#16 BLUE
#18 WHITE / BLACK
#18 RED / WHITE
#18 YELLOW
#18 BLUE
#18 ORANGE
#18 GREEN
#18 WHIT
#6 RED
#6 WHITE
#18 RED
#10 RED
#16 ORANGE
#16 YELLOW
#6 BLACK
#6 GREEN
BRAIDED GROUND WIRE
#18 WHITE / BLACK
#18 YELLOW
#16 YELLOW
#6 WHITE
1
2
3
4
5
6
7

ITEM	PART NO.	DESCRIPTION	QTY
		1 2 3 4	
	101987402	Wire Harness Assembly (includes item 1)	1
1	1015769	Wire Assembly, #6 White	1
2	1012382	Wire Assembly, #6 Black	1
3	1015920	Wire Assembly, #6 Braided Ground	1
4	1015737	Wire Assembly, #10 Red (part of electrical component box)	1
5	1015332	Wire Assembly, #10 Braided Ground	1
6	101837301	Wire Assembly, #6 Green	1
7	1014119	Wire Assembly, #6 Red	1

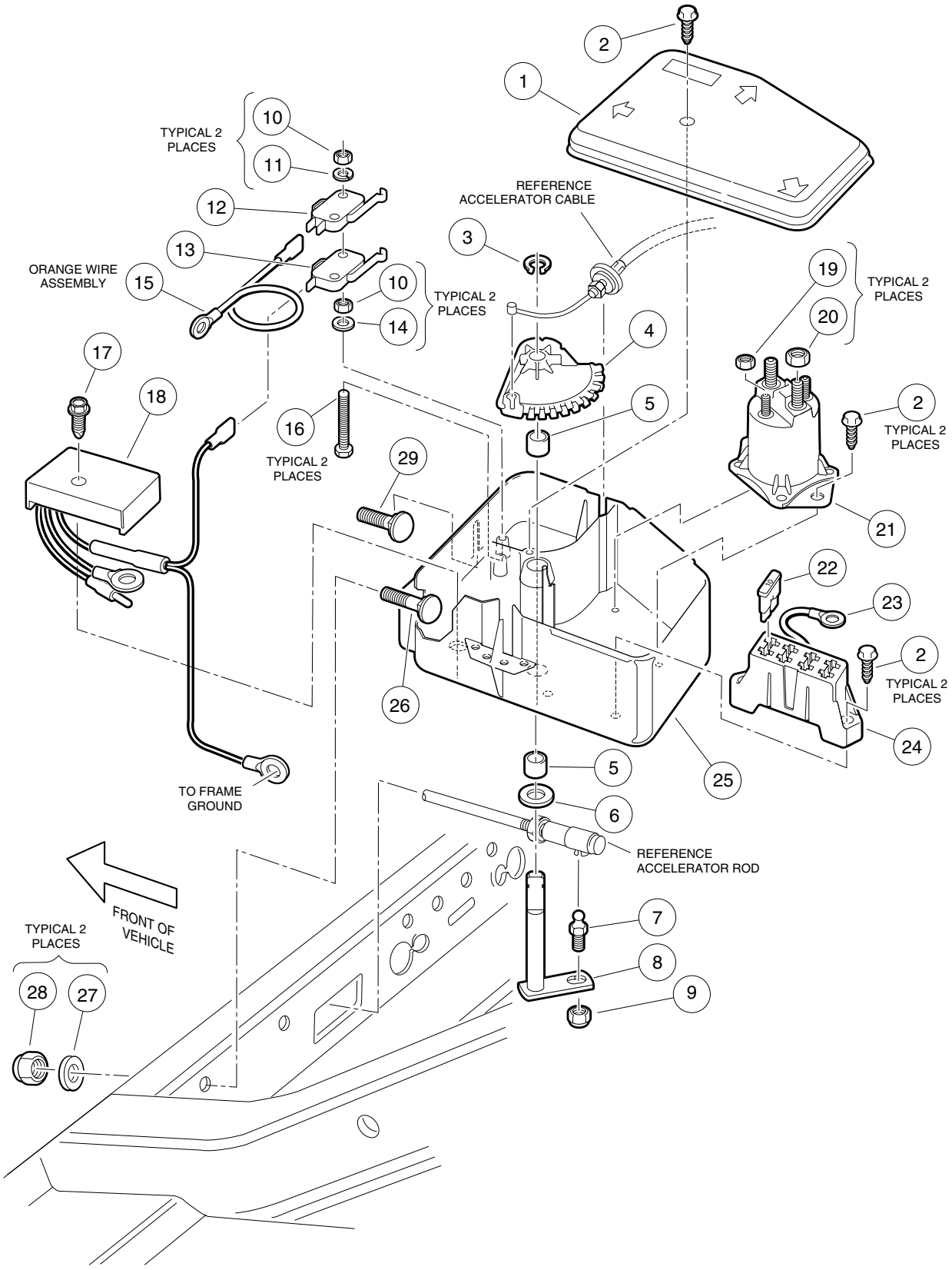
1
2
3
4
5
6
7
8
9
10
11
12
13
14
15
16
17
18
19
20
21
22
23
24
25
26
27
28
29
TYPICAL 2 PLACES
REFERENCE ACCELERATOR CABLE
ORANGE WIRE ASSEMBLY
TO FRAME GROUND
REFERENCE ACCELERATOR ROD
FRONT OF VEHICLE

ELECTRICAL COMPONENT BOX – GASOLINE VILLAGER 4

ITEM	PART NO.	DESCRIPTION	QTY
		1 2 3 4	
	101992601	Box, Electrical Component, Complete (includes items 1 - 25)	1
1	1015372	Cover, Electrical Component Box	1
2	1015752	Screw, Hi-Lo, #12-16 x 5/8	5
3	1013589	Ring, Retaining	1
4	1015373	Cam, Electrical Box	1
5	1014145	Bushing, Bronze	2
6	1014065	Washer, Flat	1
7	1010954	Stud, Ball, 1/4-28	1
8	1015345	Assembly, Bell Crank and Shaft	1
9	8717	Nut, Nylon Lock, 1/4-28	1
10	8057	Nut, Hex, #4-40	4
11	8058	Washer, Lock, #4	2
12	1014807	Switch, Limit	1
13	1014808	Switch, Limit	1
14	1012431	Washer, Flat, #4	2
15	N/A	Wire Assembly, #16 Orange	1
16	1015878	Screw, Hex-Head Machine, #4-40 x 1-5/8	2
17	101856102	Screw, Hex Washer-Head Hi-Lo, 1/4-15 x 1-1/2	1
18	1015777	Assembly, Voltage Regulator	1
19	7893	Nut, Hex, #10-32	2
20	1242	Nut, Hex, 5/16-18	2
21	1013609	Solenoid, 12-Volt	1
22	1012295	Fuse, 10-Amp	1
23	1015737	Wire Assembly, #10 Red	1
24	1015741	Block, Fuse	1
25	1015371	Box, Electrical Component	1
26	1015405	Bolt, Carriage, 5/16-18 x 2	1
27	1241	Washer, Flat, 5/16	2
28	7473	Nut, Nylon Lock, 5/16-18	2
29	7818	Bolt, Carriage, 5/16-18 x 1-1/2	1

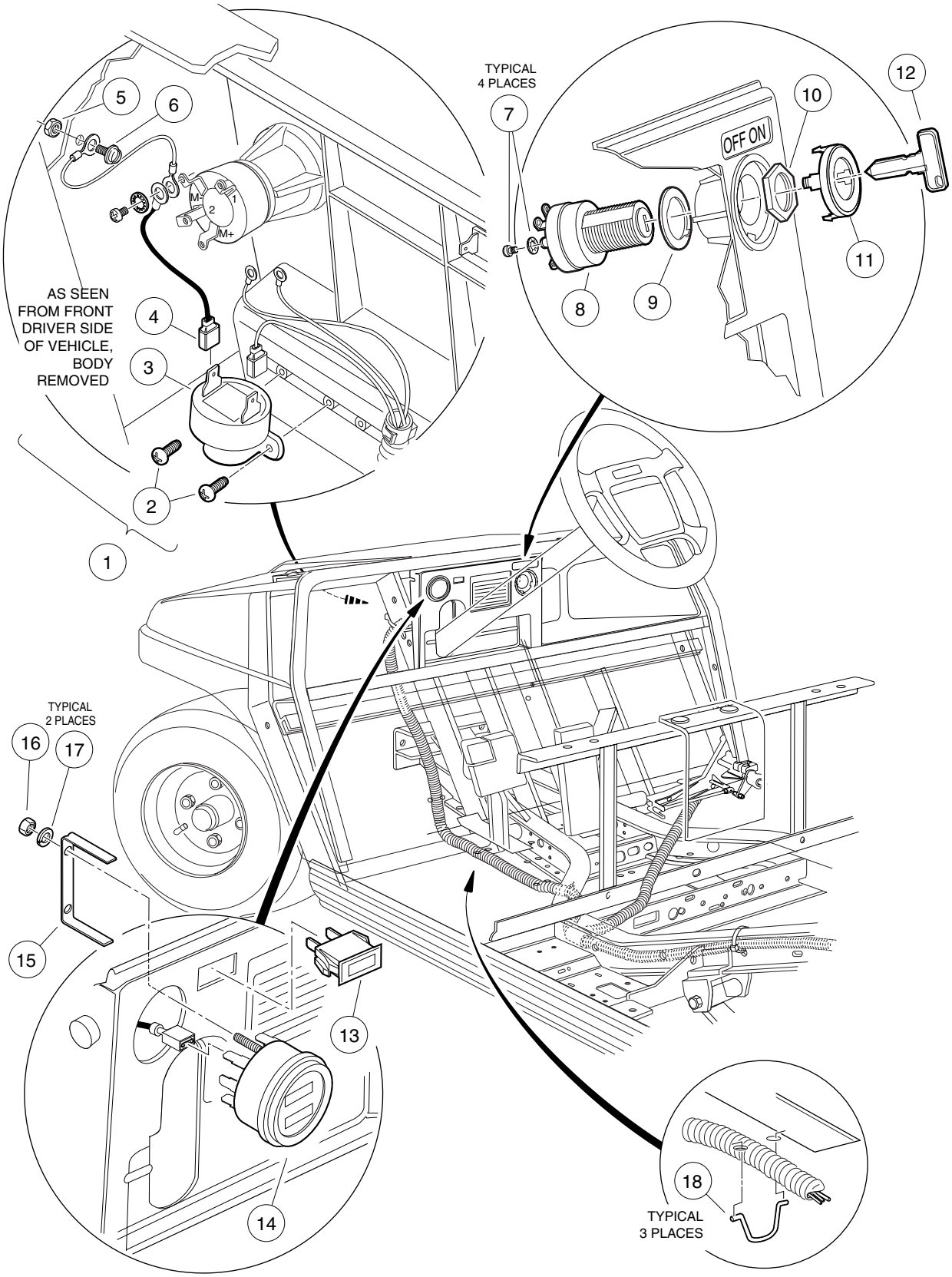
TYPICAL
4 PLACES
OFF ON
AS SEEN
FROM FRONT
DRIVER SIDE
OF VEHICLE,
BODY
REMOVED
M-
2
1
M+
TYPICAL
2 PLACES
TYPICAL
3 PLACES
1
2
3
4
5
6
7
8
9
10
11
12
13
14
15
16
17
18

ELECTRICAL COMPONENTS, FRONT BODY – GASOLINE VILLAGER 4

ITEM	PART NO.	DESCRIPTION	QTY
		1 2 3 4	
1	1016859	Kit, Reverse Buzzer (includes items 2 - 4)	1
2	1016849	Screw, Pan-Head Hi-Lo, #4-24 x 5/16	2
3	1016851	Buzzer, Reverse	1
4	N/A	Wire Assembly, #18 Black	1
5	1011229	Nut, K-Lock, #6-32	1
6	1015720	Screw, Hex Washer-Head, # 6-32 x 1/2	1
7	101830601	Assembly, Screw and Washer	4
8	101826301	Switch, Key	1
9	101851101	Washer, Key Switch	1
10	101830701	Nut, Key Switch	1
11	101834502	Cap, Key Switch	1
12	1012505	Key (pair)	1
13	1016630	Light, Low Oil Warning	1
14	101990701	Fuel Gauge/Hour Meter (includes item 15)	1
15	N/A	Bracket	1
16	101991101	Nut, M4 x .7	2
17	1012986	Washer, Lock, M4	2
18	101900901	Retainer, Harness	3

GASOLINE VILLAGER 6 & 8 TRANSPORTER 4 & 6 VEHICLE WIRING

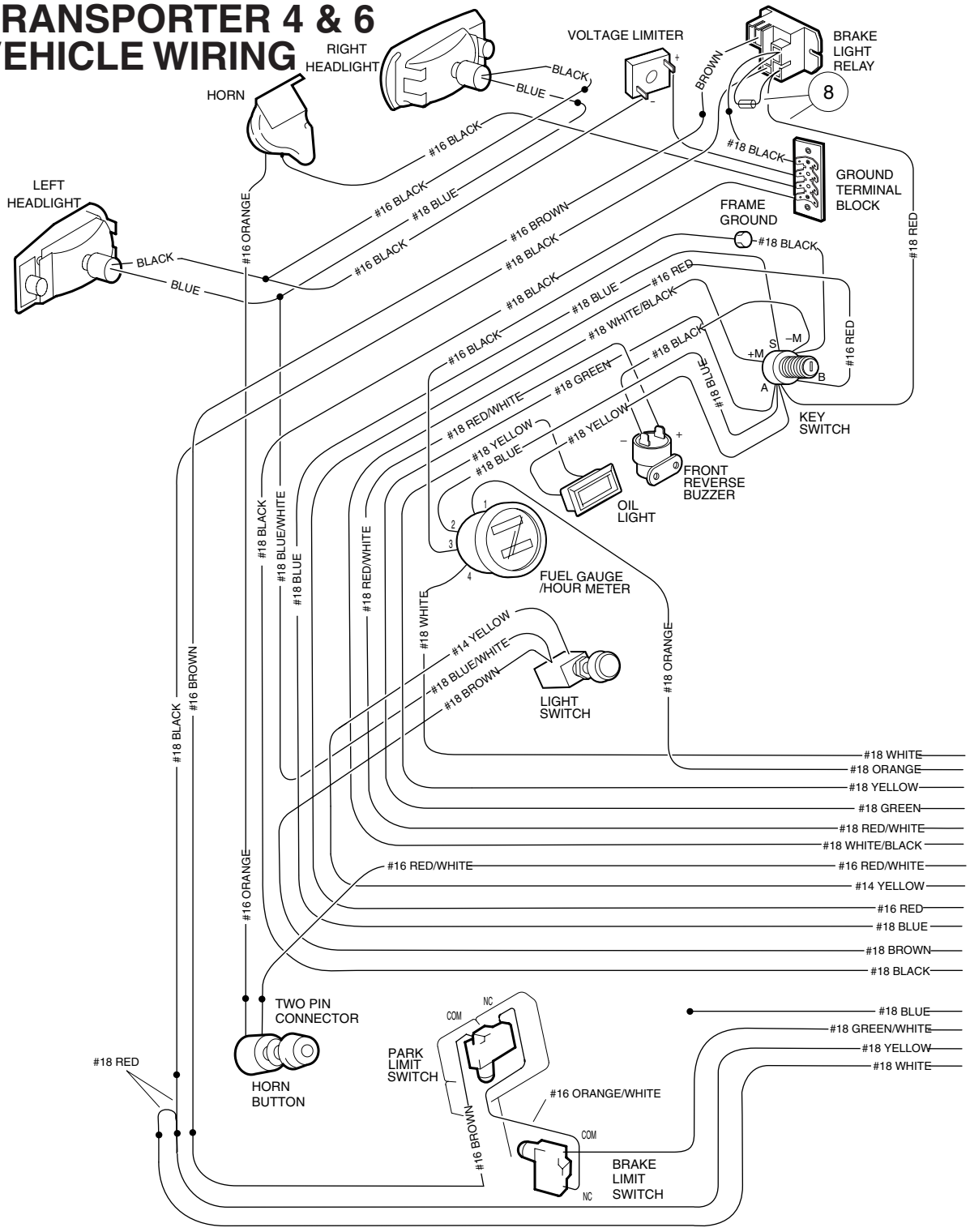

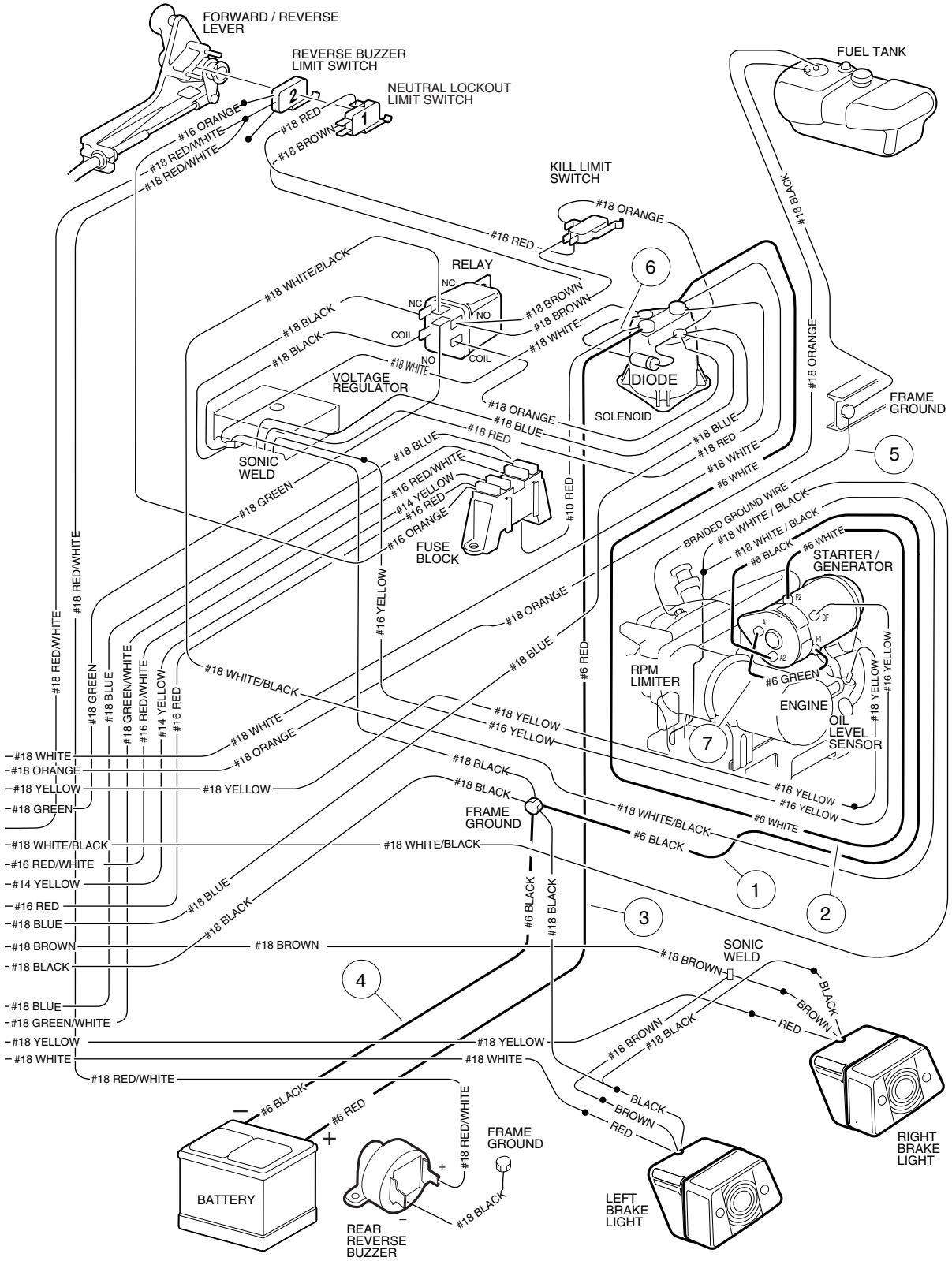
FORWARD / REVERSE LEVER
REVERSE BUZZER LIMIT SWITCH
NEUTRAL LOCKOUT LIMIT SWITCH
FUEL TANK
KILL LIMIT SWITCH
RELAY
VOLTAGE REGULATOR
DIODE
SOLENOID
FRAME GROUND
SONIC WELD
FUSE BLOCK
BRAIDED GROUND WIRE
STARTER / GENERATOR
RPM LIMITER
ENGINE
OIL LEVEL SENSOR
BATTERY
REAR REVERSE BUZZER
LEFT BRAKE LIGHT
RIGHT BRAKE LIGHT
#16 ORANGE
#18 RED/WHITE
#18 RED
#18 BROWN
#18 BLACK
#18 WHITE/BLACK
#18 WHITE
#18 BLUE
#18 GREEN
#18 YELLOW
#18 ORANGE
#18 GREEN/WHITE
#16 RED/WHITE
#14 YELLOW
#16 RED
#16 YELLOW
#10 RED
#6 RED
#6 BLACK
#6 WHITE
#6 GREEN
#18 WHITE / BLACK
#18 BLACK
BLACK
BROWN
RED

See previous two pages for wiring diagram.

WIRING – GASOLINE VILLAGER 6, VILLAGER 8, TRANSPORTER 4, AND TRANSPORTER 6

ITEM	PART NO.	DESCRIPTION	QTY
		1 2 3 4	
	101990402	Harness, Wire (Villager 6, TransPorter 4, and TransPorter 6 vehicles) (includes items 1 - 2)	1
	101990203	Harness, Wire (Villager 8 vehicles) (includes items 1 and 2)	1
1	1016380	Wire Assembly, #6 Black	1
2	1015769	Wire Assembly, #6 White	1
3	1014119	Wire Assembly, #6 Red	1
4	1012382	Wire Assembly, #6 Black	1
5	1015332	Wire Assembly, #10 Braided Ground Wire	1
6	1015737	Wire Assembly, #10 Red (part of electrical component box)	1
7	101837301	Wire Assembly, #6 Green	1
8	101914401	Assembly, Voltage Suppressor (includes #18 red and #18 blue)	1

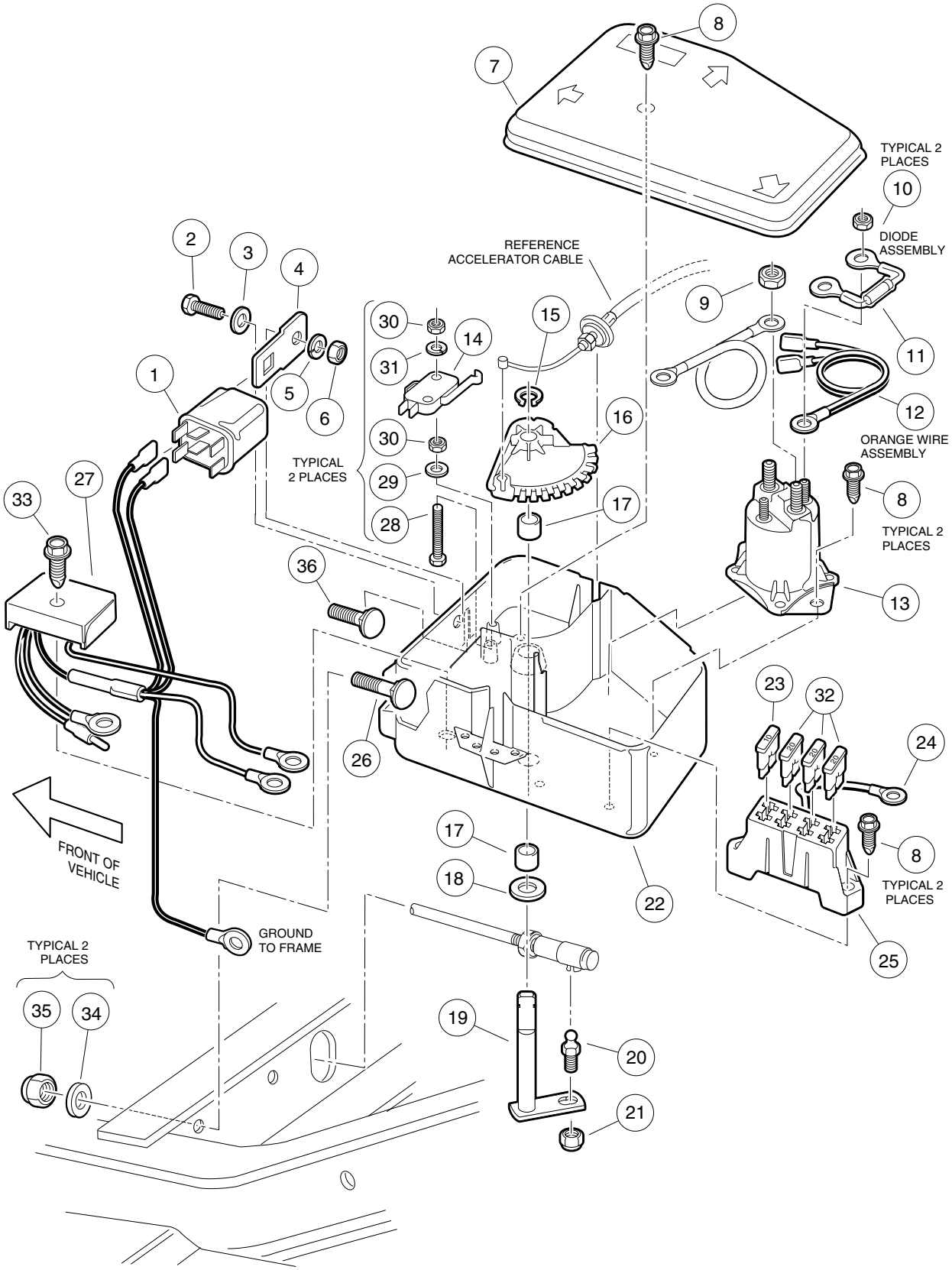
TYPICAL 2 PLACES
DIODE ASSEMBLY
REFERENCE ACCELERATOR CABLE
ORANGE WIRE ASSEMBLY
TYPICAL 2 PLACES
TYPICAL 2 PLACES
FRONT OF VEHICLE
GROUND TO FRAME
TYPICAL 2 PLACES
TYPICAL 2 PLACES

ELECTRICAL COMPONENT BOX – GASOLINE VILLAGER 6 AND 8, TRANSPORTER 4 AND 6

ITEM	PART NO.	DESCRIPTION	QTY
		1 2 3 4	
	101992701	Box, Electrical Component, Complete (includes items 1 - 31)	1
1	1017239	Relay	1
2	8450	Screw, Hex-Head Machine, #10-24 x 1/2	1
3	183	Washer, Flat, #10	1
4	1017243	Bracket, Relay Mounting	1
5	1016	Washer, Lock, #10	1
6	1017	Nut, Hex, #10-24	1
7	1015372	Cover, Electrical Component Box	1
8	1015752	Screw, Hi-Lo, #12-16 x 5/8	5
9	1242	Nut, Hex, 5/16-18	2
10	7893	Nut, Hex, #10-32	2
11	1014948	Assembly, Diode	1
12	N/A	Wire Assembly, #18 Orange	1
13	1013609	Solenoid	1
14	1014807	Switch, Limit	1
15	1013589	Ring, Retaining	1
16	1015373	Cam, Electrical Box	1
17	1014145	Bushing, Bronze	2
18	1014065	Washer, Flat	1
19	1015345	Assembly, Bell Crank and Shaft	1
20	1010954	Stud, Ball, 1/4-28	1
21	8717	Nut, Nylon Lock, 1/4-28	1
22	1016997	Box, Electrical Component	1
23	1012295	Fuse, 10-Amp	1
24	1015737	Wire Assembly, #10 Red	1
25	1015741	Block, Fuse	1
26	1015405	Bolt, Carriage, 5/16-18 x 2	1
27	1017238	Regulator, Voltage	1
28	1015878	Screw, Hex-Head Machine, #4-40 x 1-5/8	2
29	1012431	Washer, Flat, #4	2
30	8057	Nut, Hex, #4-40	4
31	8058	Washer, Lock, #4	2
32	1016423	Fuse, 20-Amp	3
33	101856102	Screw, Hex Washer-Head Hi-Lo, 1/4-15 x 1-1/2	1
34	1241	Washer, Flat, 5/16	2
35	7473	Nut, Nylon Lock, 5/16-18	2
36	7818	Bolt, Carriage, 5/16-18 x 1-1/2	1

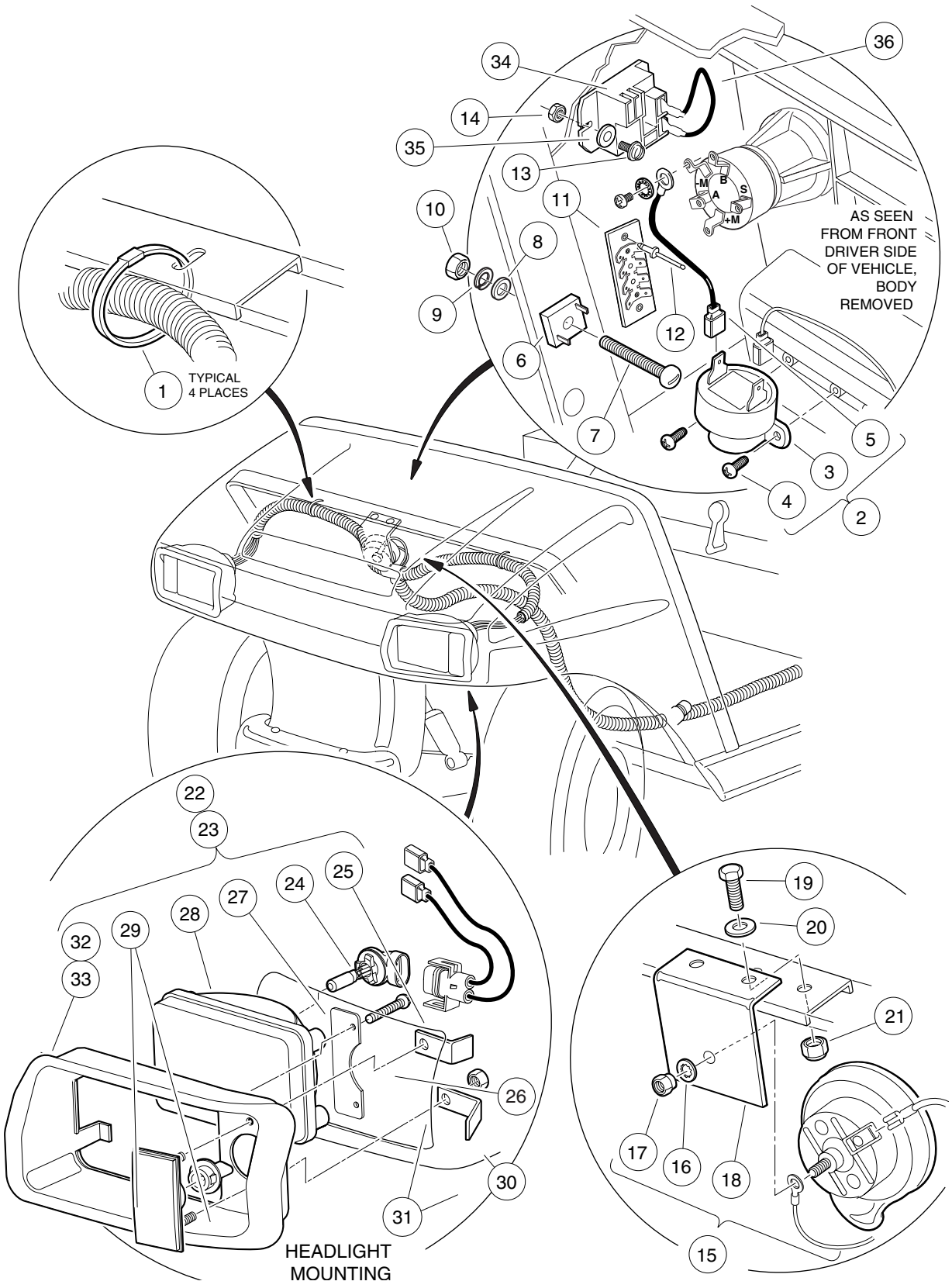
1
TYPICAL
4 PLACES
AS SEEN
FROM FRONT
DRIVER SIDE
OF VEHICLE,
BODY
REMOVED
M
B
A
S
+M
HEADLIGHT
MOUNTING

ELECTRICAL COMPONENTS, FRONT BODY – GASOLINE
VILLAGER 6 AND 8, TRANSPORTER 4 AND 6

ITEM	PART NO.	DESCRIPTION	QTY
		1 2 3 4	
1	8639	Tie, Wire	4
2	1016859	Kit, Reverse Buzzer (includes items 3 - 5)	1
3	1016851	Buzzer, Reverse	1
4	1016849	Screw, Pan-Head Hi-Lo, #4-24 x 5/16	2
5	N/A	Wire Assembly, #18 Black	1
6	1017721	Limiter, Voltage (for gasoline vehicle lighting installation)	1
7	1010909	Screw, Machine, #10-32 x 1-1/4	1
8	183	Washer, Flat, #10	1
9	1016	Washer, Lock, #10	1
10	7893	Nut, Hex, #10-32	1
11	1016356	Block, Terminal	1
12	1013357	Rivet, Aluminum Pop, 5/32	2
13	1017853	Bolt, Hex-Head Machine, #6-32 x 3/4	2
14	1011229	Nut, K-Lock, #6-32	2
15	4029	Assembly, Horn (includes items 16, 17 and 18)	1
16	7820	Washer, Internal Tooth, 5/16	1
17	101955101	Nut, M6 x 1.25	1
18	1011825	Bracket, Horn	1
19	304	Screw, Hex-Head Cap, 1/4-20 x 1	2
20	332	Washer, Flat, 1/4	2
21	8233	Nut, Nylon Lock, 1/4-20	2
22	101988001	Assembly, Headlight, Driver-Side (includes items 24 - 32)	1
23	101988002	Assembly, Headlight, Passenger-Side (includes items 24 - 31 and 33)	1
24	101988101	Bulb, Halogen	1
25	101987901	Harness, Headlight Wire	1
26	1013461	Screw, Hi-Lo, #10-16 x 7/16	2
27	1017065	Retainer, Headlight	1
28	101988201	Lens, Headlight	1
29	1017062	Assembly, Turn Signal Lens	1
30	7893	Nut, Hex, #10-32	2
31	1017064	Bracket, Mounting	2
32	1016880	Bezel, Headlight, Driver-Side	1
33	1016879	Bezel, Headlight, Passenger-Side	1
34	102199001	Relay, Brake Light, 12-Volt	1
35	7591	Washer, Flat	2
36	101914401	Assembly, Voltage Suppressor	1

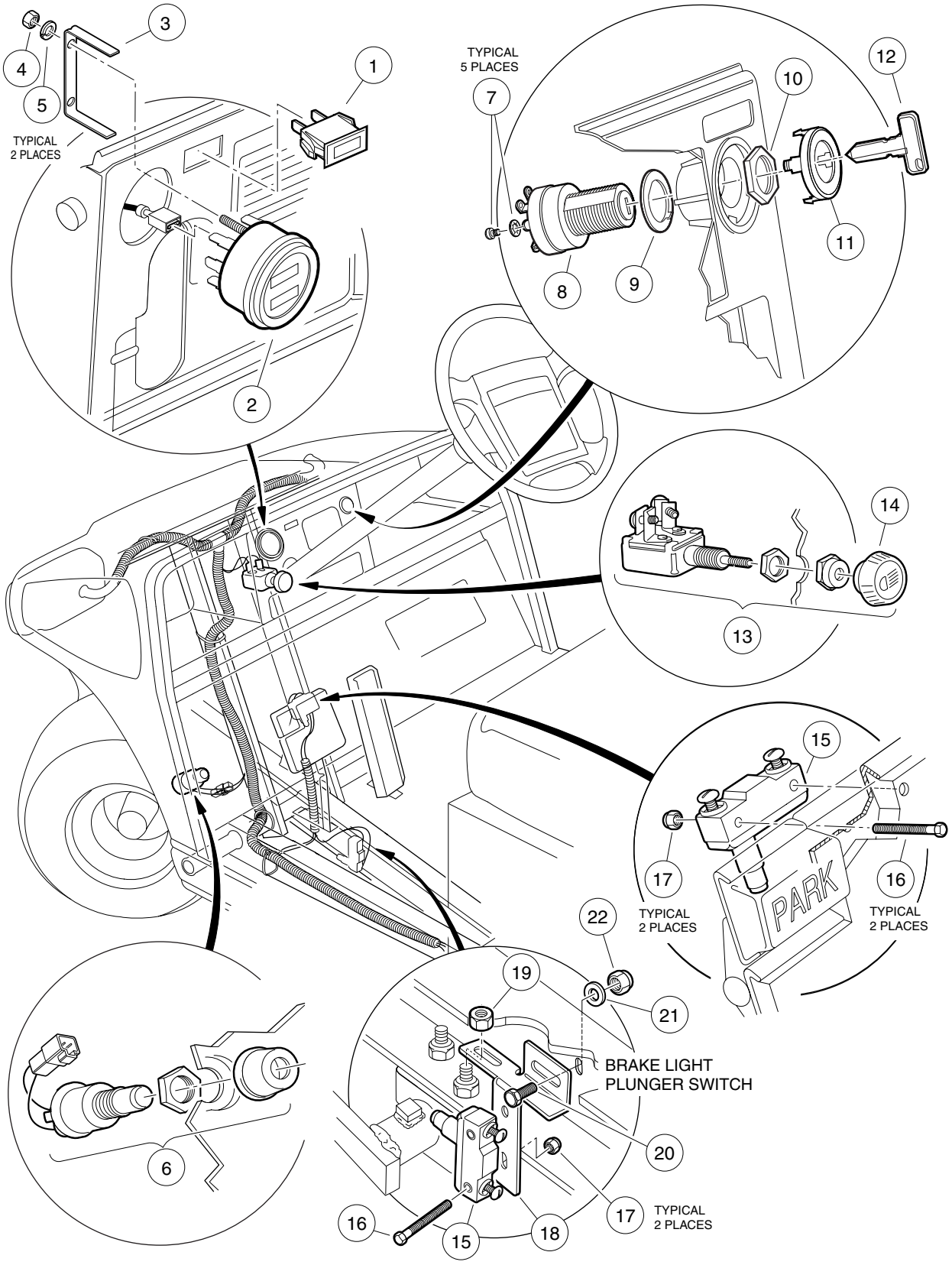
3
4
5
TYPICAL
2 PLACES
1
2
TYPICAL
5 PLACES
7
8
9
10
11
12
13
14
15
PARK
17
TYPICAL
2 PLACES
16
TYPICAL
2 PLACES
22
19
21
BRAKE LIGHT
PLUNGER SWITCH
20
6
16
15
18
17
TYPICAL
2 PLACES

CONTROLS AND INDICATORS – GASOLINE VILLAGER 6, VILLAGER 8, TRANSPORTER 4, AND TRANSPORTER 6

ITEM	PART NO.	DESCRIPTION	QTY
		1 2 3 4	
1	1016630	Light, Low Oil Warning	1
2	101990701	Fuel Gauge/Hour Meter (includes item 3)	1
3	N/A	Bracket	1
4	101991101	Nut, M4 X .7	2
5	1012986	Washer, Lock, M4	2
6	101969701	Button, Horn	1
7	101830601	Assembly, Screw and Washer	5
8	101826401	Switch, Key	1
9	101851101	Washer, Key Switch	1
10	101830701	Nut, Key Switch	1
11	101834502	Cap, Key Switch	1
12	1012505	Key (pair)	1
13	4034	Switch, Light (includes item 14)	1
14	1013857	Knob, Light Switch	1
15	1011439	Switch, Limit	2
16	1011557	Screw, Hex-Head Machine, #6-32 x 1	4
17	101932201	Nut, Nylon Lock, #6-32	4
18	101957101	Bracket, Brake Light Switch	1
19	1011280	Nut, Lock, 5/16-18	1
20	7173	Bolt, Hex-Head, Cap, 5/16-18 x 3/4	1
21	1241	Washer, Flat, 5/16-18	1
22	7473	Nut, Nylon Lock, 5/16-18	1

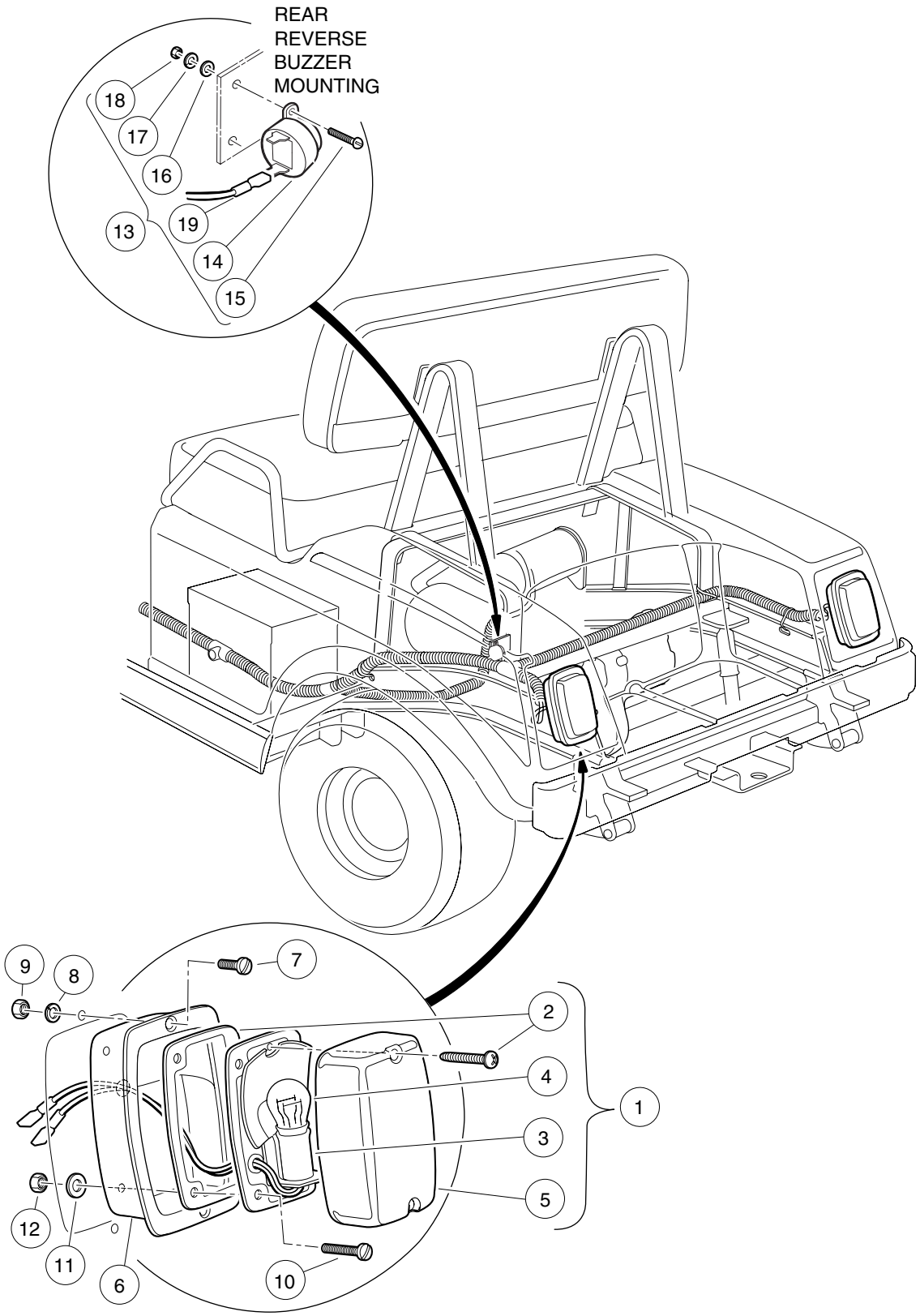
REAR
REVERSE
BUZZER
MOUNTING
18
17
16
19
13
14
15
9
8
7
2
4
1
3
5
12
11
6
10

ELECTRICAL COMPONENTS, REAR BODY – GASOLINE VILLAGER 6 AND VILLAGER 8

ITEM	PART NO.	DESCRIPTION	QTY
		1 2 3 4	
1	1017035	Assembly, Taillight (includes items 2 - 5)	2
2	1017699	Kit, Hardware	1
3	N/A	Base, Taillight	1
4	1011582	Bulb	1
5	1011843	Lens	1
6	1011497	Bezel, Taillight	2
7	1011498	Screw, Machine, #8-32 x 1/2	4
8	1011610	Washer, Lock, #8	4
9	1011571	Nut, Hex, #8-32	4
10	1011557	Screw, Machine, #6-32 x 1	4
11	7591	Washer, Flat, #6	4
12	1011558	Nut, Hex, #6	4
13	1016859	Kit, Reverse Buzzer (includes items 14 - 19)	1
14	1016851	Buzzer, Reverse	1
15	8056	Screw, Round Head, #4-40 x 3/4	2
16	1012431	Washer, Flat, #4	2
17	8058	Washer, Lock, #4	2
18	8057	Nut, Hex, #4-40	2
19	N/A	Wire Assembly, #18 Black	1

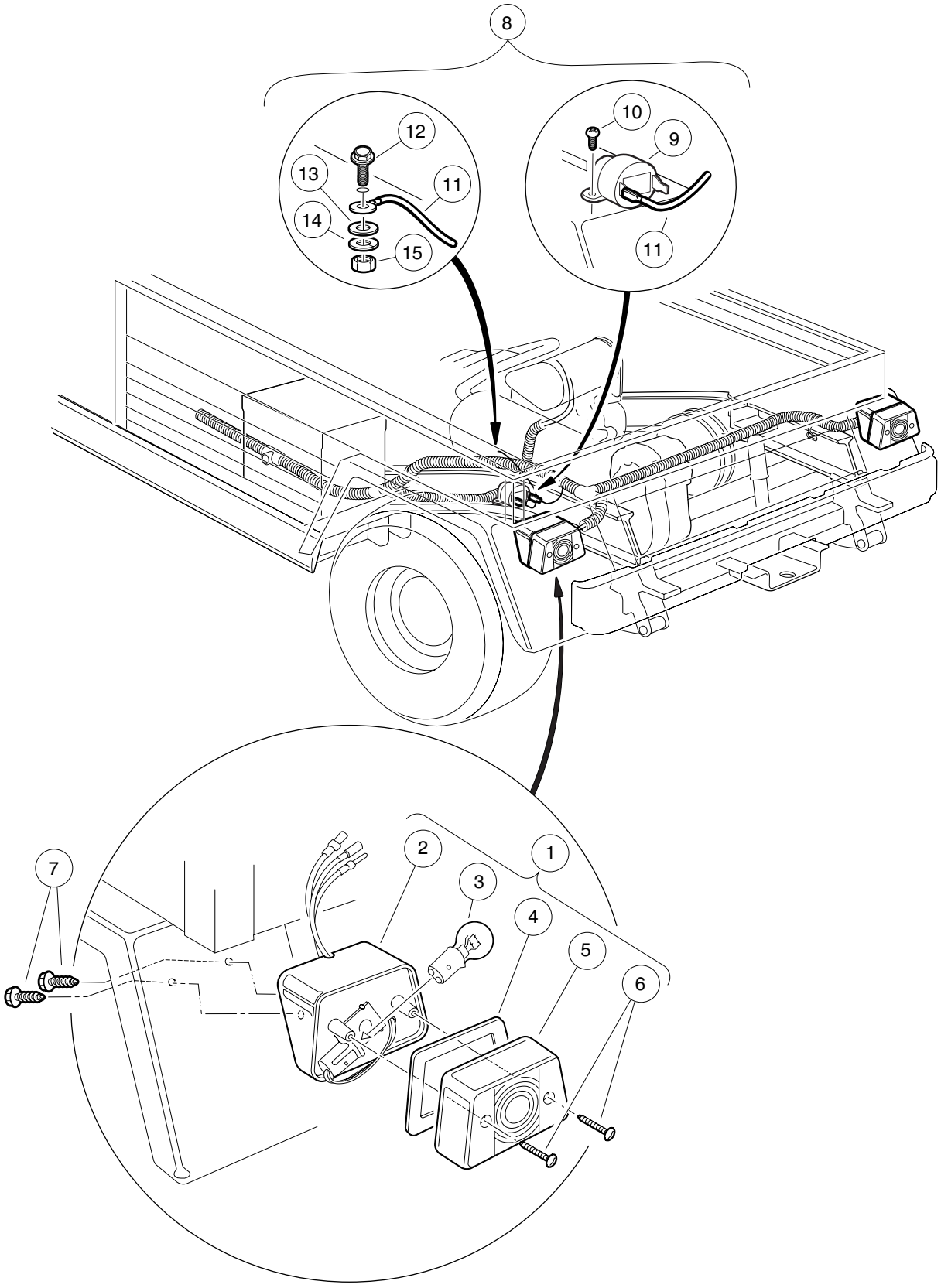
8
12
13
11
14
15
10
9
11
7
2
1
3
4
5
6

ELECTRICAL COMPONENTS, REAR BODY – GASOLINE TRANSPORTER 4 AND TRANSPORTER 6

ITEM	PART NO.	DESCRIPTION	QTY
		1 2 3 4	
1	1016717	Assembly, Taillight (includes items 2 - 6)	2
2	N/A	Housing, Taillight	1
3	1011582	Bulb	1
4	N/A	Gasket	1
5	N/A	Lens	1
6	N/A	Screw, Lens	2
7	1015752	Screw, Hex Washer-Head, #12-16 x 1/2	4
8	1016859	Kit, Reverse Buzzer (includes items 9 - 15)	1
9	1016851	Buzzer, Reverse	1
10	1016849	Screw, Pan-Head, Hi-Lo, #4-24 x 5/16	2
11	N/A	Wire Assembly, #18 Black	1
12	1015720	Screw, Hex Washer-Head, #6-32 x 1/2	1
13	7591	Washer, Flat	1
14	1011622	Washer, Lock, #6	1
15	1011558	Nut, Hex, #6-32	1

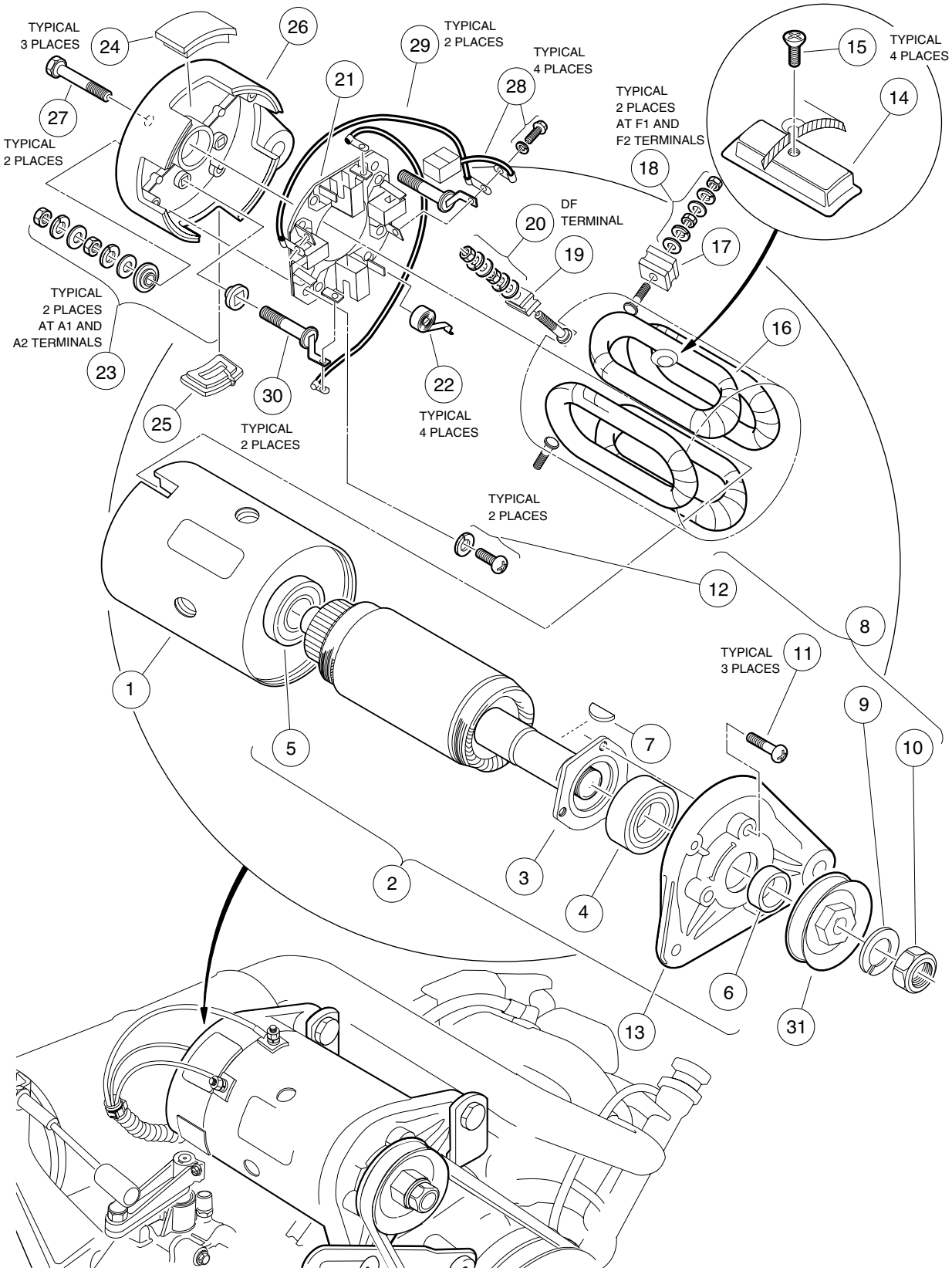
TYPICAL
3 PLACES
24
26
29
TYPICAL
2 PLACES
TYPICAL
4 PLACES
28
21
15
TYPICAL
4 PLACES
14
TYPICAL
2 PLACES
AT F1 AND
F2 TERMINALS
18
27
TYPICAL
2 PLACES
DF
TERMINAL
20
19
17
TYPICAL
2 PLACES
AT A1 AND
A2 TERMINALS
16
23
30
22
25
TYPICAL
2 PLACES
TYPICAL
4 PLACES
TYPICAL
2 PLACES
12
8
TYPICAL
3 PLACES
11
1
9
10
5
7
2
3
4
6
13
31

STARTER/GENERATOR ASSEMBLY

ITEM	PART NO.	DESCRIPTION	QTY
		1 2 3 4	
	101833701	Starter/Generator (clockwise rotation) (includes items 1 - 30)	1
1	101875201	Housing, Field Coil	1
2	101875101	Assembly, Armature (includes items 3 - 6)	1
3	101875001	Retainer, Bearing	1
4	1013001	Ball Bearing, Output Shaft	1
5	1013005	Commutator, Ball Bearing	1
6	101939901	Spacer, 5/16	1
7	1013003	Key, Woodruff	1
8	101876501	Kit, Pulley Nut and Screw (includes items 9 - 12)	1
9	N/A	Washer, Lock, M14	1
10	N/A	Nut, Hex, M14 x 2	1
11	N/A	Screw, Cross-Recessed, M5 x 0.8 x 18 mm	3
12	101896501	Screw, Cross-Recessed, M5 x 0.8 x 16 mm (with lock washer)	2
13	101874901	End Bell, Output Shaft	1
14	101875301	Set, Pole (set of 4)	1
15	101875401	Screw, Pole Piece (set of 4)	1
16	101875501	Coil, Field	1
17	101875601	Insulator, F Terminal	2
18	101877601	Package, Terminal Hardware (F1 and F2)	2
19	101875701	Insulator, DF Terminal	1
20	101877701	Package, Terminal Hardware (DF)	1
21	101301102	Holder, Brush (includes item 22)	1
22	101878101	Spring, Brush	4
23	101876001	Package, Terminal Hardware (A1 and A2)	2
24	101876301	Cover, Brush Inspection Port (Set of 4) (includes item 25)	1
25	1017653	Cover, Brush Inspection Port, with Drain	1
26	101876402	End Bell, Commutator	1
27	101879001	Bolt, Clamp, M6 x 1 x 180 mm	2
28	101869302	Package, Brush (includes 4 brushes, 4 screws, 4 washers)	1
29	101876202	Connector, Brush	2
30	101875802	A Connector (set of 2)	1
31	1014289	Pulley	1

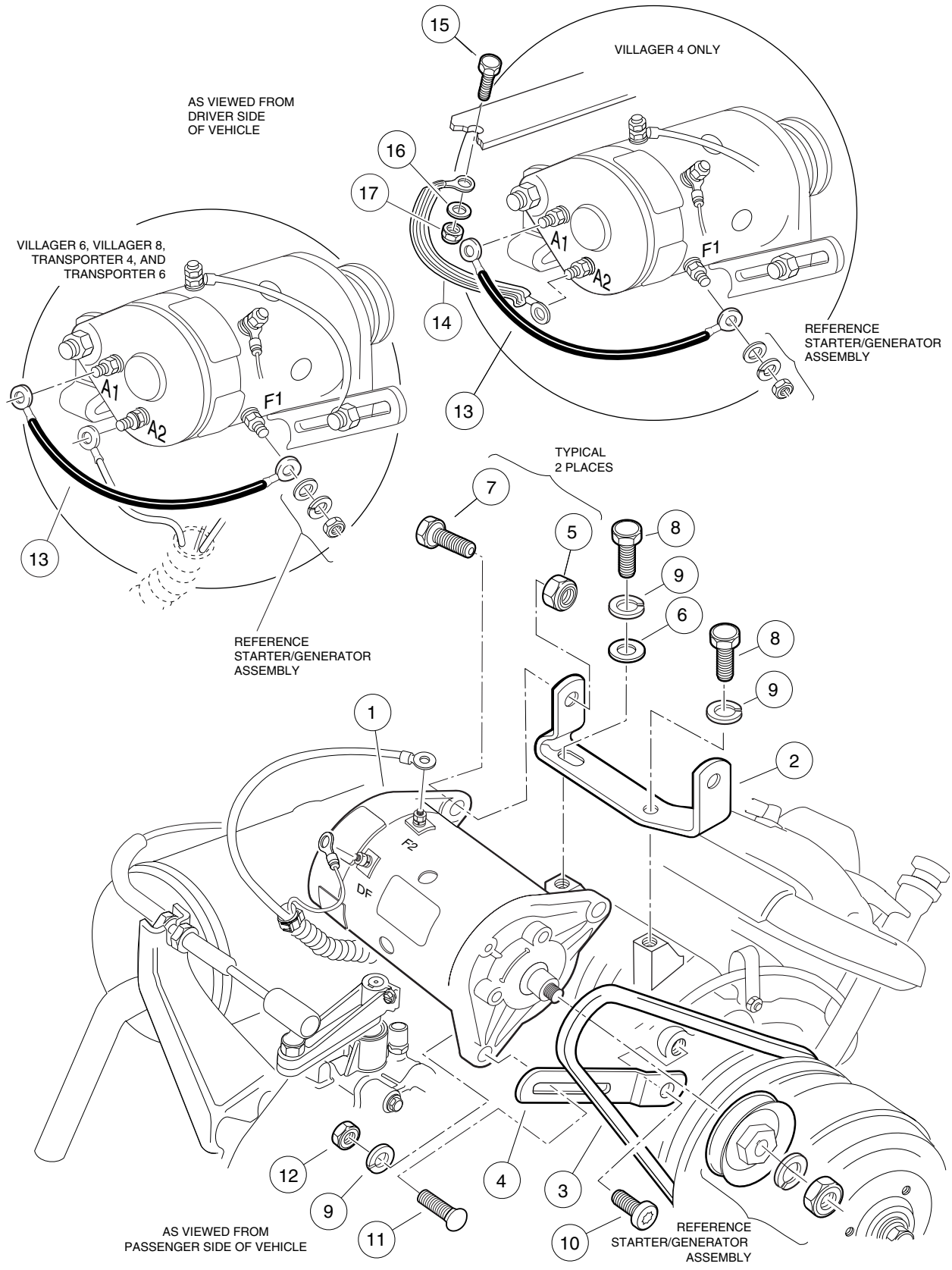
VILLAGER 4 ONLY
AS VIEWED FROM
DRIVER SIDE
OF VEHICLE
VILLAGER 6, VILLAGER 8,
TRANSPORTER 4, AND
TRANSPORTER 6
REFERENCE
STARTER/GENERATOR
ASSEMBLY
TYPICAL
2 PLACES
REFERENCE
STARTER/GENERATOR
ASSEMBLY
AS VIEWED FROM
PASSENGER SIDE OF VEHICLE
REFERENCE
STARTER/GENERATOR
ASSEMBLY
A1
A2
F1
F2
DF
1
2
3
4
5
6
7
8
9
10
11
12
13
14
15
16
17

STARTER/GENERATOR MOUNTING

ITEM	PART NO.	DESCRIPTION	QTY
		1 2 3 4	
1	101833701	Starter/Generator	1
2	101524002	Bracket, Mounting	1
3	101916701	Belt, Starter/Generator	1
4	1016883	Bracket, Adjusting	1
5	8754	Nut, Nylon Lock, 3/8-16	2
6	1241	Washer, Flat, 5/16	1
7	705	Screw, Hex-Head Cap, 3/8-16 x 1-1/4	2
8	1012830	Screw, Hex-Head Cap, M8 x 1.25 x 22 mm	2
9	7174	Washer, Lock, 5/16	3
10	1016074	Screw, Torx-Head, M8 x 1.25 x 18 mm	1
11	1015932	Bolt, Carriage, 5/16-18 x 1	1
12	1242	Nut, Hex, 5/16-18	1
13	101837301	Wire Assembly, #6 Green	1
14	1015920	Wire Assembly, #6 Braided Ground (Villager 4 only)	1
15	7173	Screw, Hex-Head Cap, 5/16-18 x 3/4 (Villager 4 only)	1
16	1241	Washer, Flat, 5/16 (Villager 4 only)	1
17	7473	Nut, Nylon Lock, 5/16-18 (Villager 4 only)	1

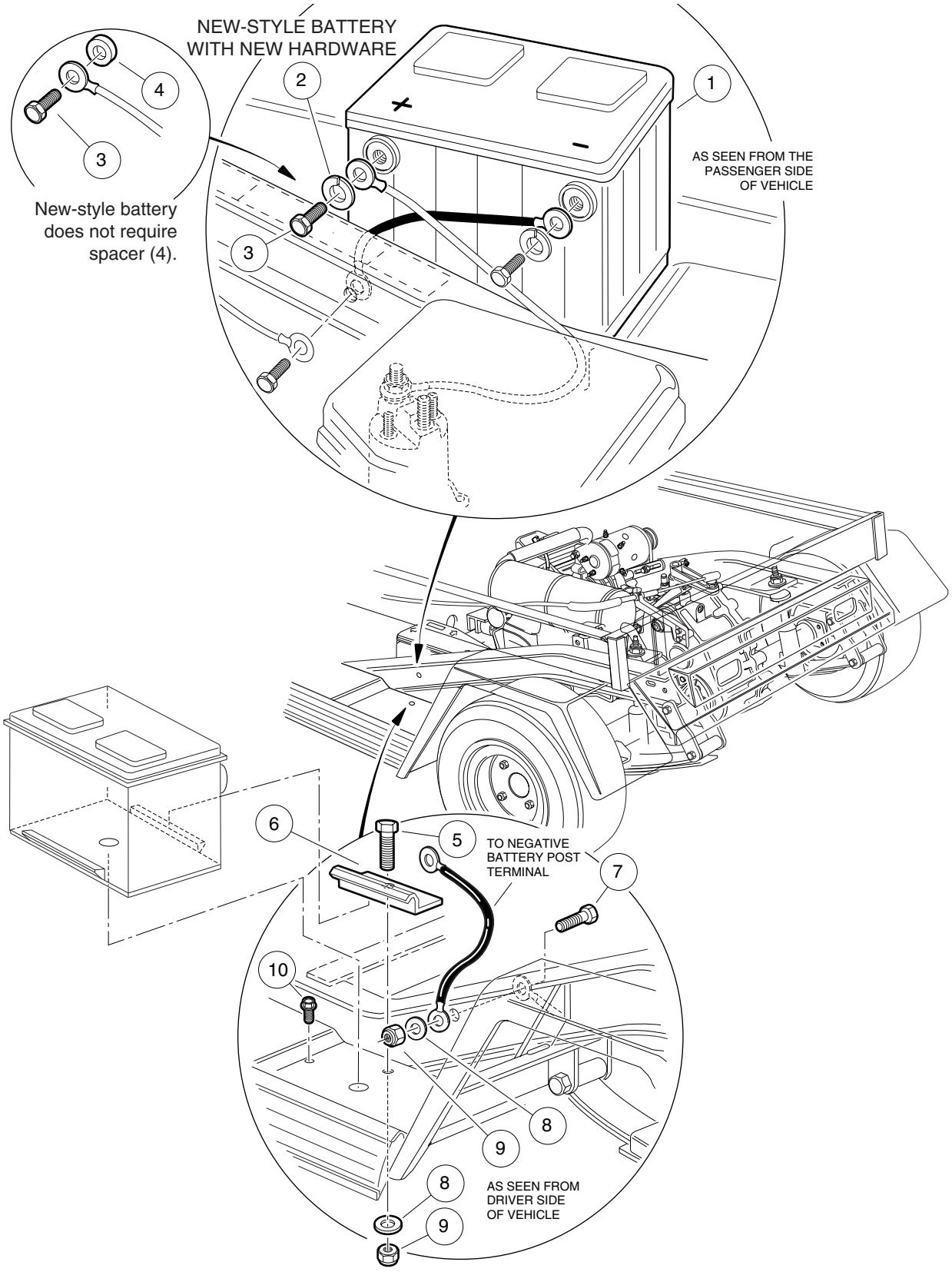
NEW-STYLE BATTERY
WITH NEW HARDWARE
4
3
New-style battery
does not require
spacer (4).
2
1
AS SEEN FROM THE
PASSENGER SIDE
OF VEHICLE
3
6
5
TO NEGATIVE
BATTERY POST
TERMINAL
7
10
8
9
8
9
AS SEEN FROM
DRIVER SIDE
OF VEHICLE

BATTERY – GASOLINE VEHICLE

ITEM	PART NO.	DESCRIPTION	QTY
		1 2 3 4	
1	1012328	Battery, 12-Volt	1
2	102355301	Washer, Lock, Stainless Steel, 3/8*	2
3	1014375	Screw, Hex-Head Cap, Stainless Steel, 3/8-16 x 1/2	2
4	1014374	Spacer, Battery Terminal Bolt*	2
5	1010934	Screw, Hex-Head Cap, 5/16-18 x 1	1
6	101898001	Clamp, Battery	1
7	7173	Screw, Hex Cap, 5/16-18 x 3/4	1
8	1241	Washer, Flat, 5/16	2
9	7473	Nut, Nylon Lock, 5/16-18	2
10	1014288	Screw, Thread-Forming, 5/16-16 x 3/4	1

*NOTE: When ordering a new battery, you must order the new stainless steel lockwasher (2); however, the lockwasher cannot be used in conjunction with the older battery terminal design that requires a spacer (4).

6

G

7

G

FE290 ENGINE

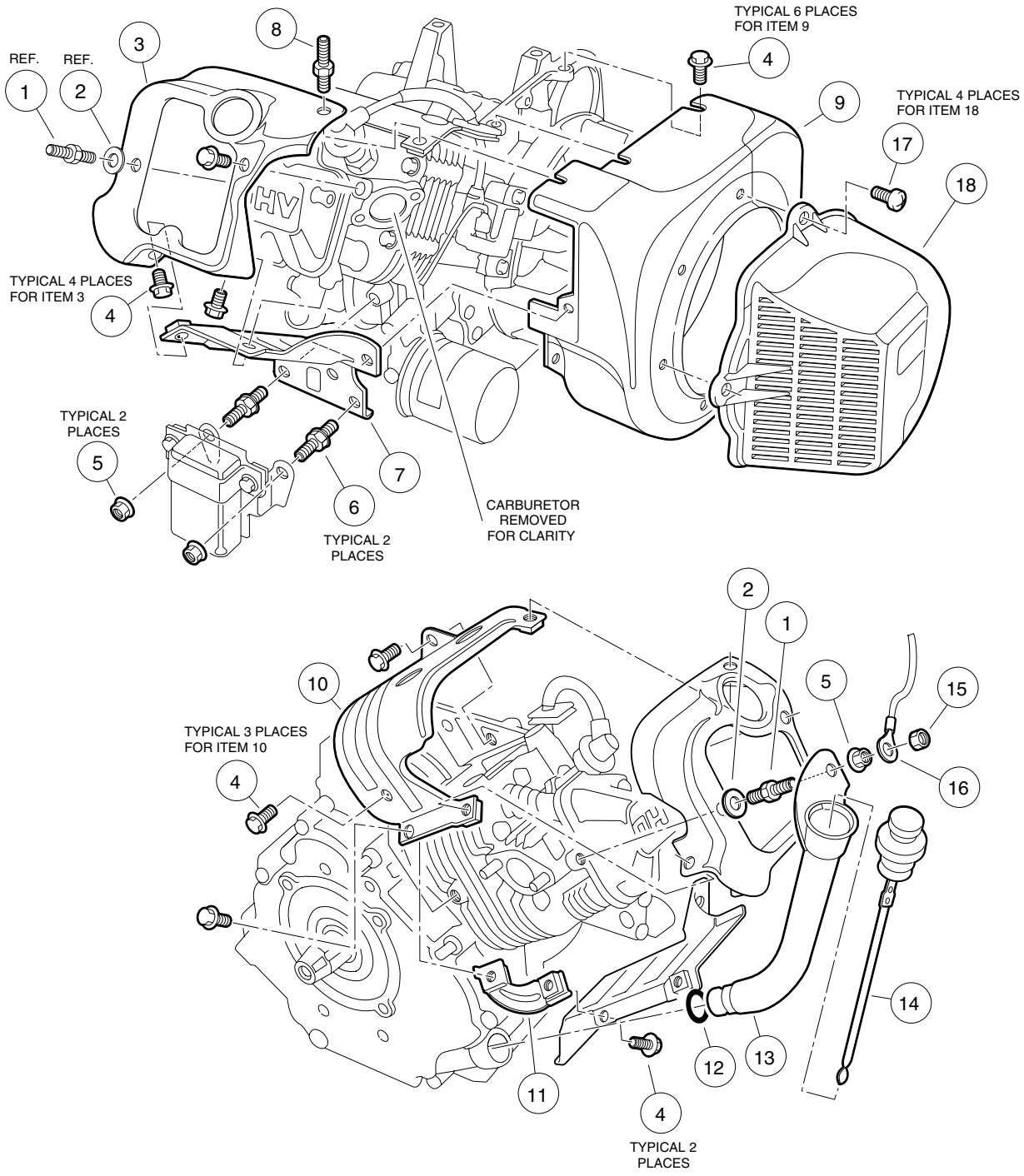

FE290 ENGINE – SHROUDS AND BRACKETS

ITEM	PART NO.	DESCRIPTION	QTY
		1 2 3 4	
	101953901	FE290 OHV Gasoline Engine (clockwise rotation) with Carburetor (does not include items 15 through 18)	1
1	1016507	Bolt, 2-Ended, M6 x 1 x 29 mm	1
2	N/A	Washer, Flat, 6 mm	1
3	1016524	Shroud, Engine, FE290	1
4	1016456	Bolt, Flanged, M6 x 1 x 12 mm	15
5	1016547	Nut, Flange, M6 x 1	3
6	101909701	Bolt, 2-Ended, M6 x 1 x 27 mm	2
7	1016526	Shroud, Engine, FE290 (lower)	1
8	1017221	Bolt, 2-Ended, M6 x 1 x 46 mm	1
9	101915601	Housing, Fan	1
10	1016525	Shroud, Engine, FE290 (upper)	1
11	1016443	Bracket	1
12	1016539	O-Ring	1
13	1016536	Tube, Oil Filler, FE290	1
14	1016531	Dipstick	1
15	101887601	Nut, Nylon Lock, M6 x 1	1
16	1015332	Wire Assembly, #10 Braided Ground	1
17	1015969	Screw, Pan Head, M6 x 1 x 14 mm	4
18	1015649	Shroud, Fan	1

7

G

FE290 ENGINE

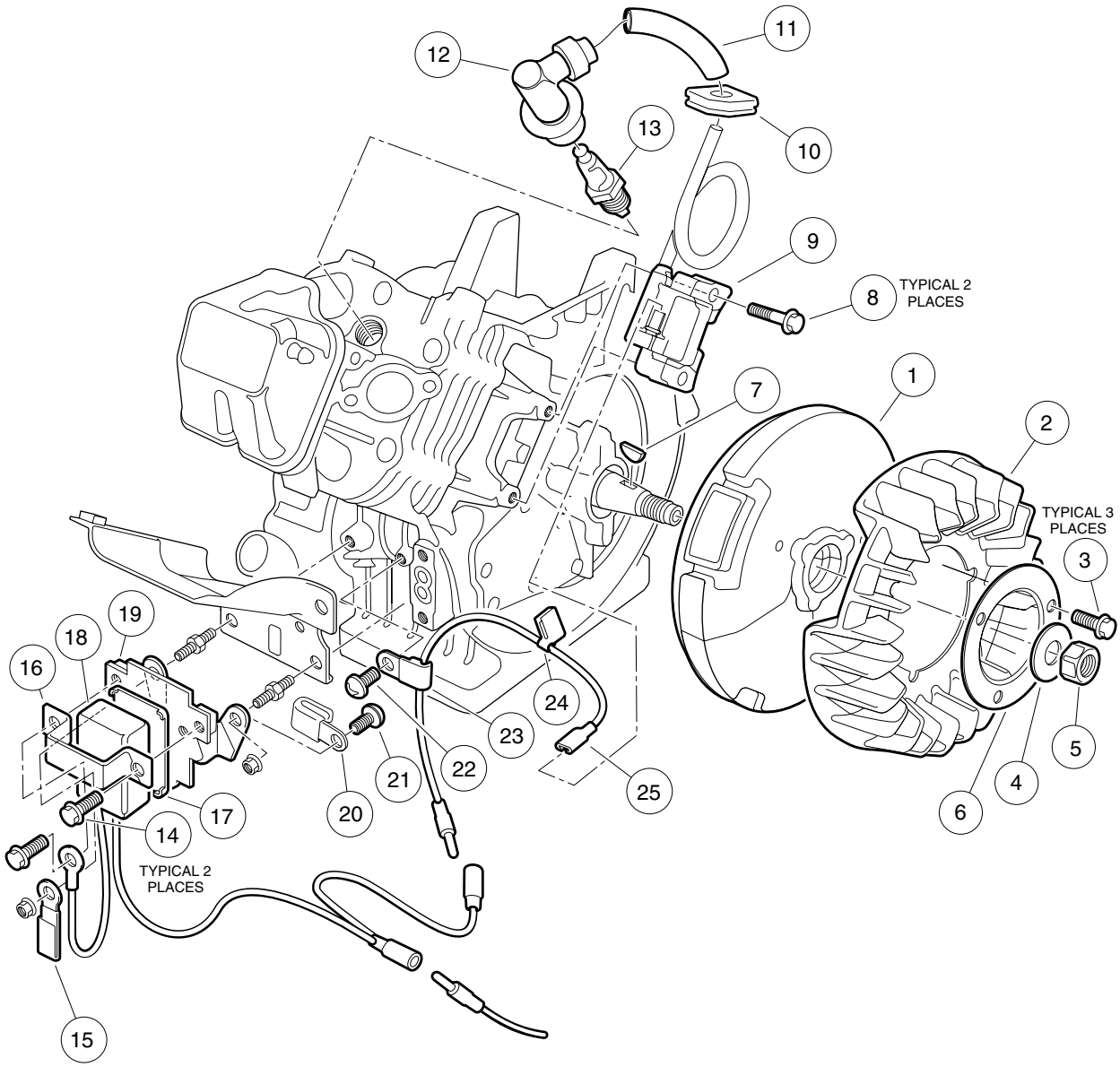

FE290 ENGINE – IGNITION COMPONENTS AND FLYWHEEL

ITEM	PART NO.	DESCRIPTION	QTY
		1 2 3 4	
1	101915701	Flywheel	1
2	101915801	Fan, Flywheel, Gray	1
3	1017448	Screw, Flanged Hex-Head, M6 x 1 x 10 mm	3
4	1016548	Washer, Flat, 16 mm	1
5	1016505	Nut, Hex, M16 x 1.5	1
6	1017455	Plate, Flywheel Fan	1
7	1016562	Key	1
8	1016455	Bolt, Flanged, M5 x 0.8 x 25 mm	2
9	101909201	Coil, Ignition (with internal igniter)	1
10	1016578	Grommet	1
11	1016588	Tube, 7 mm x 70 mm	1
12	1016493	Assembly, Plug Cap	1
13	101881101	Plug, Spark, OHV (Autolite®)	1
13	AM10724	Plug, Spark, OHV (NGK®)	1
14	1016456	Bolt, Flanged, M6 x 1 x 12 mm	2
15	1012981	Clamp	1
16	1016579	Band, RPM Limiter Mount	1
17	1016586	Damper, RPM Limiter	1
18	101909401	Limiter, RPM, OHV	1
19	1016445	Bracket, RPM Limiter	1
20	101909501	Clamp	1
21	1016497	Screw, Cross Pan-Head, M5 x 0.8 x 8 mm	1
22	1016544	Screw, Cross Pan-Head Self-Tapping, M5 x 0.8 x 12 mm	1
23	1016561	Clamp	1
24	1016587	Clamp	1
25	101909301	Wire, Lead	1

7 G FE290 ENGINE

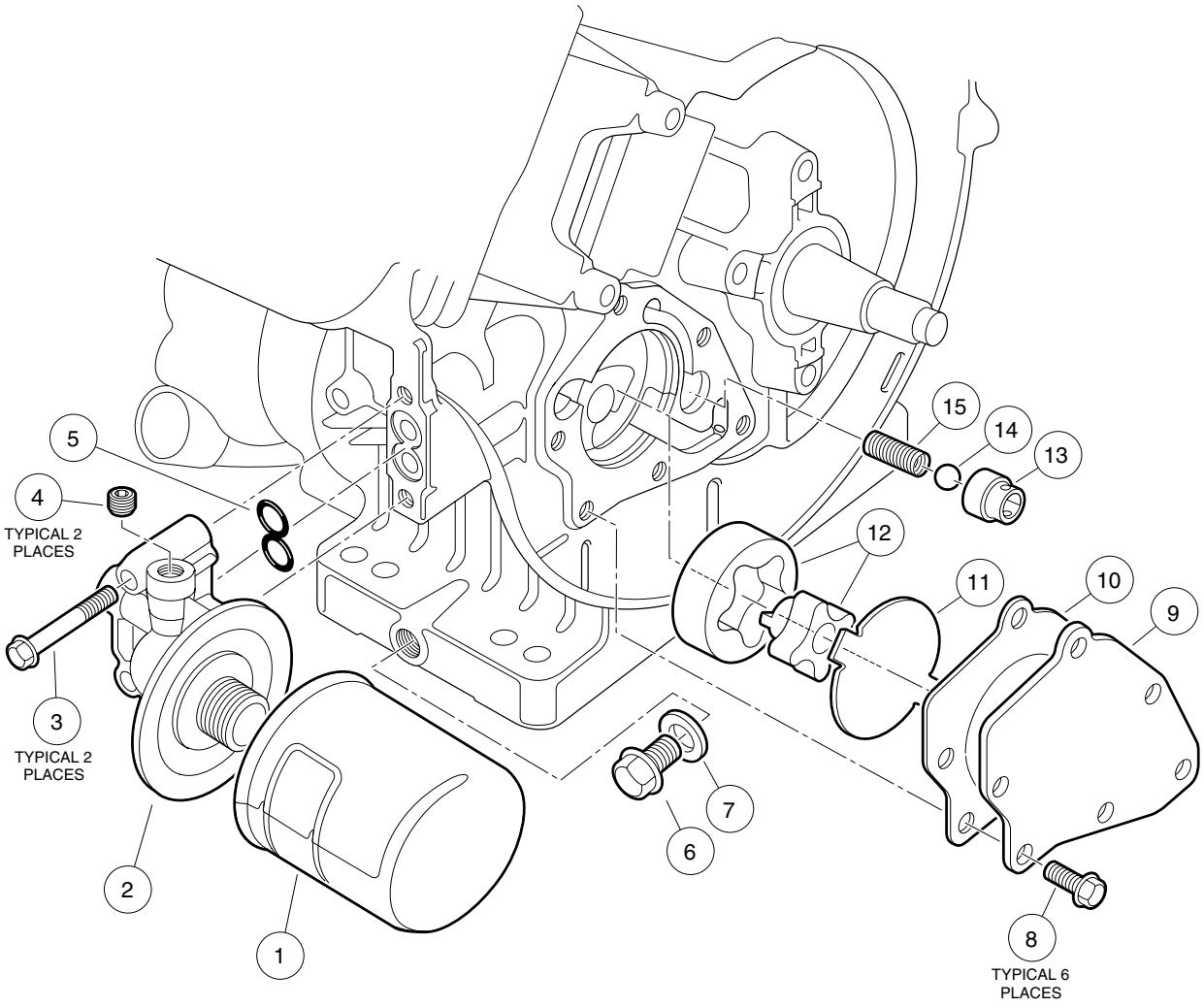

ITEM	PART NO.	DESCRIPTION	QTY
		1 2 3 4	
1	1016467	Oil Filter	1
2	1016502	Bracket, Oil Filter	1
3	1016457	Bolt, Flanged Hex-Head, M6 x 1 x 40 mm	2
4	1017507	Plug	2
5	1016570	O-Ring, Oil Filter Mount	1
6	1016576	Plug, Drain, FE290	1
7	1016432	Gasket, Drain Plug	1
8	1017456	Screw, Flanged Hex-Head, M6 x 1 x 12 mm	6
9	1016484	Cover, Pump	1
10	1016435	Gasket, Oil Pump	1
11	1016473	Plate, Oil Pump	1
12	101648203	Pump, Oil and Rotor	1
13	1016429	Seat, Valve	1
14	1016537	Ball, Steel, Pressure Relief	1
15	1016581	Spring	1

FE290 ENGINE

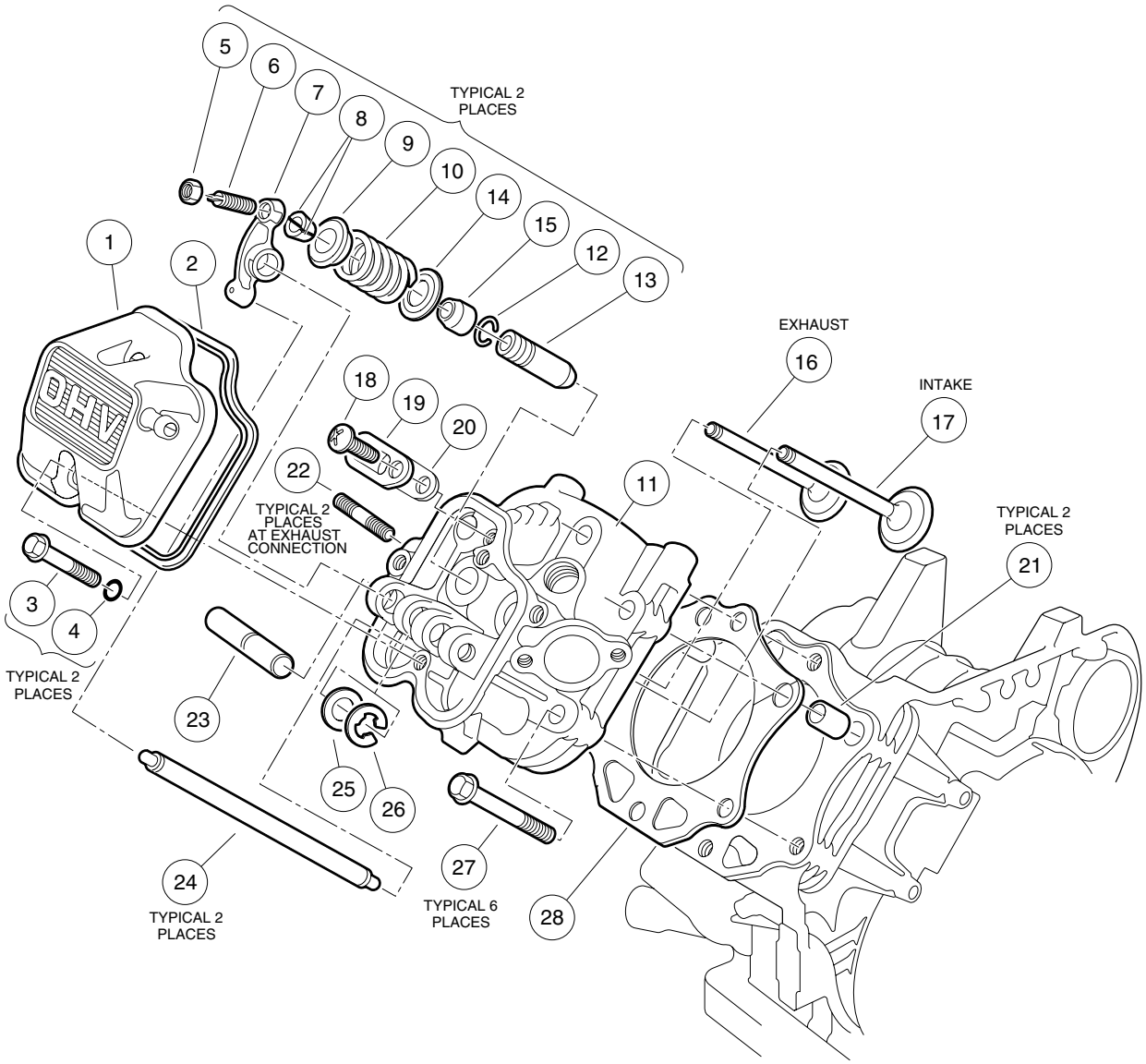

ITEM	PART NO.	DESCRIPTION	QTY
		1 2 3 4	
1	1016442	Case, Rocker	1
2	1016436	Gasket, Rocker Case	1
3	1016583	Bolt, Flanged, M6 x 1 x 35 mm	2
4	1016569	O-Ring	2
5	1016545	Nut, Hex, M5 x 0.8	2
6	1016542	Screw, Stud, M5 x 0.8	2
7	1016451	Arm, Rocker	2
8	1016450	Collet	4
9	1016449	Retainer, Valve Spring	2
10	1016523	Spring, Engine Valve	2
11	1016431	Assembly, Cylinder Head, OHV (includes items 12 and 13)	1
12	1016560	Ring, Snap	2
13	1016519	Guide, Valve	2
14	1016479	Seat, Spring	2
15	1016566	Seal, Valve	2
16	1016448	Valve, Exhaust	1
17	1016447	Valve, Intake	1
18	1016544	Screw, Cross Pan-Head Self-Tapping, M5 x 0.8 x 12 mm	1
19	1016474	Plate	1
20	1016483	Valve	1
21	1016563	Pin	2
22	1016489	Bolt, Stud, M8 x 1.25 x 29 mm	2
23	1016452	Shaft, Rocker	1
24	1016471	Rod, Push	2
25	1016549	Washer, Flat, M12	1
26	1016517	Circlip, Type E	1
27	1016458	Bolt, Flanged, M8 x 1.25 x 45 mm	6
28	1016430	Gasket, Head	1
	102304701	Kit, Gasket, FE290 (contains one each of all internal gaskets for the FE290 engine) (not shown)	1

FE290 ENGINE

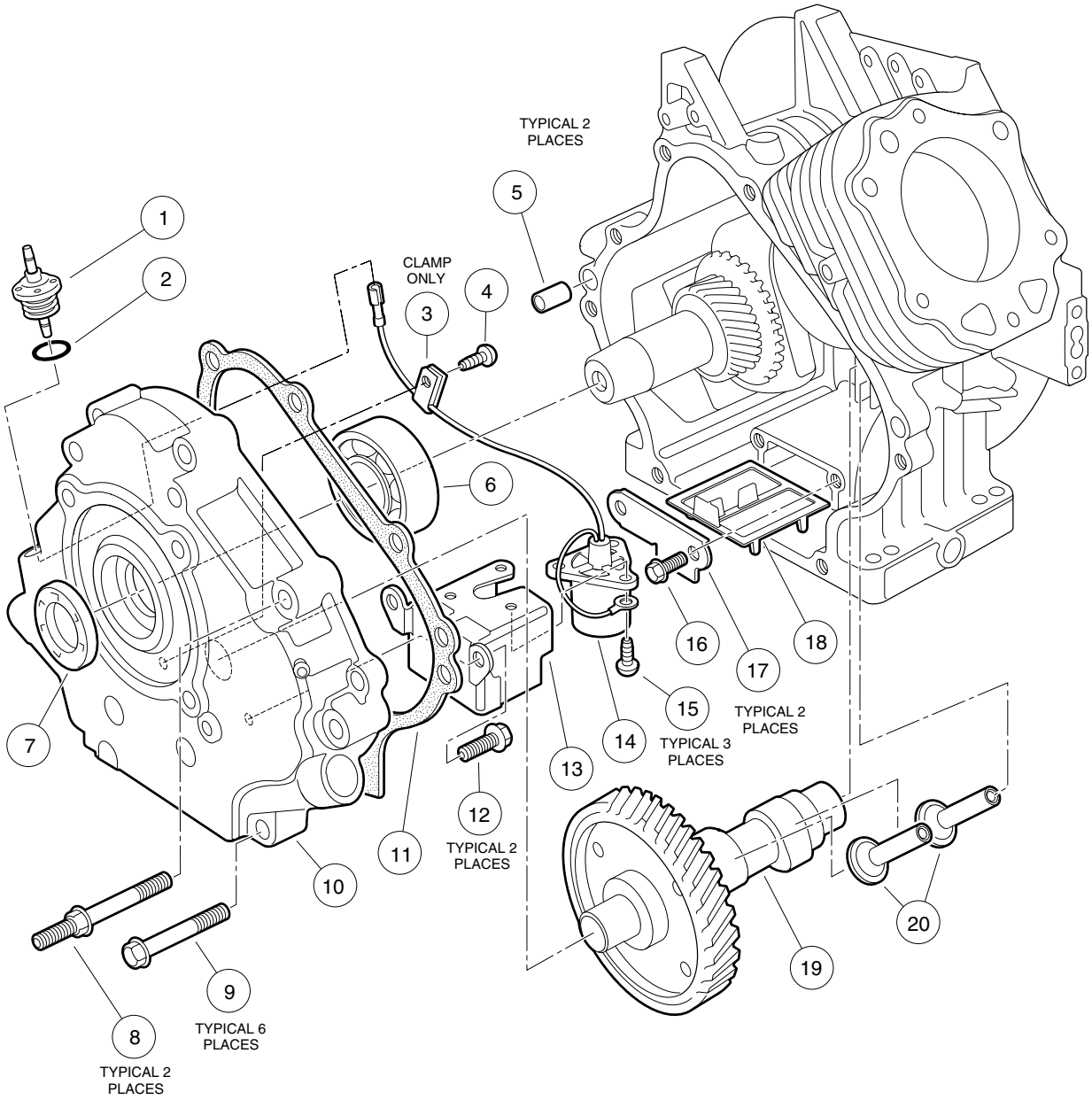

FE290 ENGINE – CRANKCASE, CAMSHAFT AND OIL SENSOR

ITEM	PART NO.	DESCRIPTION	QTY
		1 2 3 4	
1	1016535	Connector, Cord	1
2	1016538	O-Ring	1
3	1016506	Clamp	1
4	1016544	Screw, Cross Pan-Head Self-Tapping, M5 x 0.8 x 12 mm	1
5	1016564	Pin	2
6	1016565	Bearing, Ball	1
7	1016567	Seal, Crankshaft	1
8	1016584	Bolt, 2-Ended, M8 x 1.25 x 69 mm	2
9	1016458	Bolt, Flanged, M8 x 1.25 x 45 mm	6
10	1016520	Cover, Crankcase	1
11	1016446	Gasket, Crankcase Cover	1
12	1016456	Bolt, Flanged, M6 x 1 x 12 mm	2
13	1016510	Bracket, Oil Level Switch	1
14	1016494	Sensor, Oil Level	1
15	1016496	Screw, Cross Pan Head, M4 x 0.7 x 8 mm	3
16	1016454	Bolt, Flanged, M5 x 0.8 x 8 mm	2
17	1016472	Plate, Oil Filter Screen	1
18	1016521	Screen, Oil Filter	1
19	101915401	Camshaft, Complete	1
20	1016453	Tappet	2

7

G

FE290 ENGINE

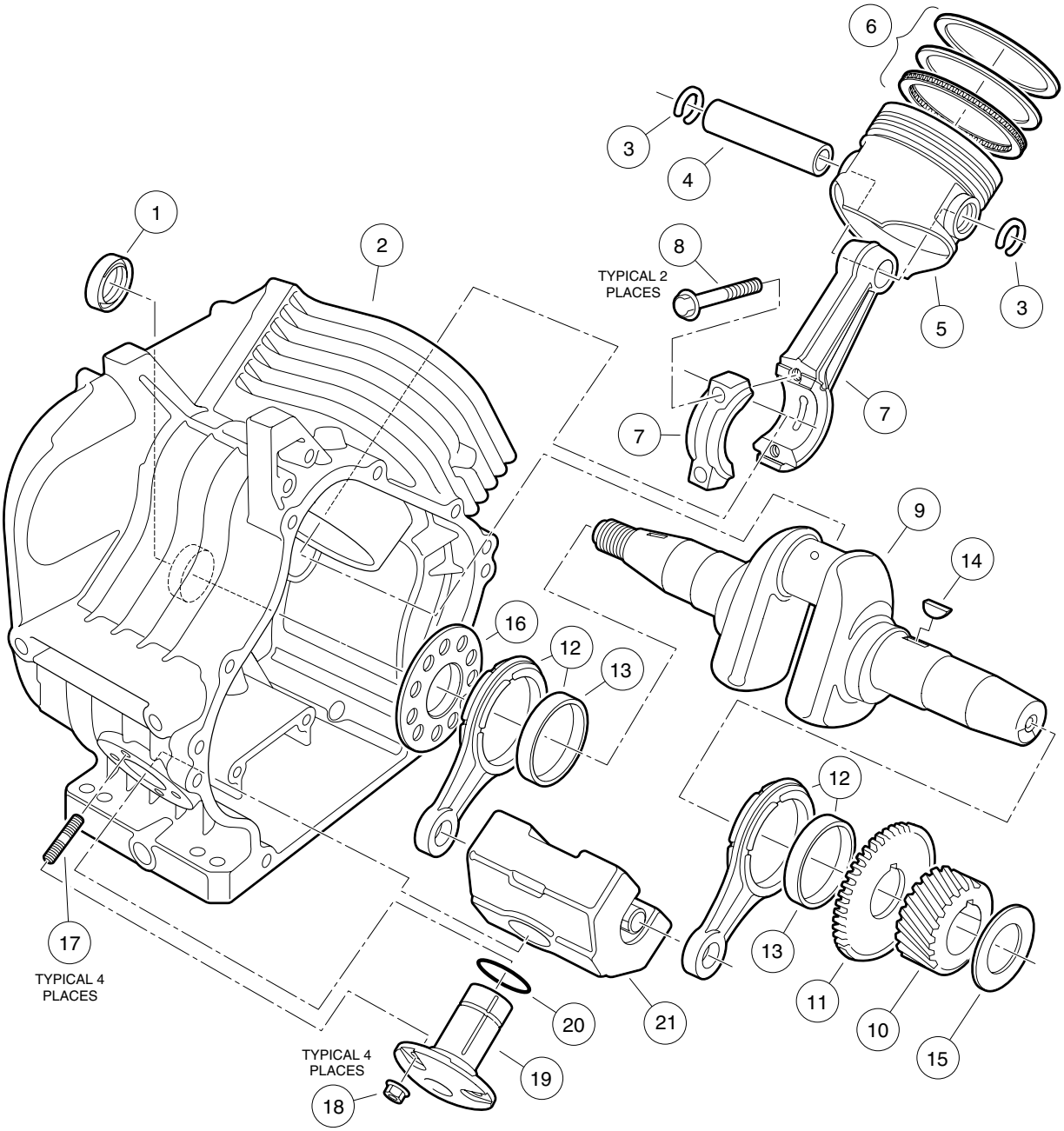

ITEM	PART NO.	DESCRIPTION	QTY
		1 2 3 4	
1	1016568	Seal, Oil	1
2	101915501	Crankcase, OHV	1
3	1016558	Ring, Snap	2
4	1016460	Pin, Piston	1
5	101645901	Piston, Standard	1
5	101645902	Piston, .25 mm Oversized	1
5	101645903	Piston, .50 mm Oversized	1
6	101646101	Ring Set, Piston, Standard	1
6	101646102	Ring Set, Piston, .25 mm Oversized	1
6	101646103	Ring Set, Piston, .50 mm Oversized	1
7	101647501	Assembly, Connecting Rod, Standard (includes 2 each of item 8)	1
7	101647502	Assembly, Connecting Rod, .50 mm Undersized (includes 2 each of item 8)	1
8	1016509	Screw, Hex-Head Cap, M7 x 1 x 36 mm	2
9	101922301	Crankshaft, FE290 (left-hand thread) (includes items 10, 11 and one each of item 12)	1
10	1016533	Gear, Helical	1
11	1016532	Gear, Spur	1
12	1016516	Assembly, Rod (includes one each of item 13)	2
13	1016580	Bearing, Plain	2
14	1016562	Key	1
15	101655001	Shim, Crankshaft, 1.13 mm Thick	A/R
15	101655002	Shim, Crankshaft, 1.18 mm Thick	A/R
15	101655003	Shim, Crankshaft, 1.23 mm Thick	A/R
15	101655004	Shim, Crankshaft, 1.28 mm Thick	A/R
15	101655005	Shim, Crankshaft, 1.33 mm Thick	A/R
15	101655006	Shim, Crankshaft, 1.38 mm Thick	A/R
15	101655007	Shim, Crankshaft, 1.43 mm Thick	A/R
15	101655008	Shim, Crankshaft, 1.48 mm Thick	A/R
15	101655009	Shim, Crankshaft, 1.53 mm Thick	A/R
16	1016559	Spacer	1
17	1016541	Bolt, Stud, M6 x 1 x 22 mm	4
18	1016547	Nut, Flanged, M6 x 1	4
19	1016470	Shaft, Counterbalance Guide	1
20	1016571	O-Ring	1
21	1016469	Weight, Counterbalance	1

FE350 ENGINE

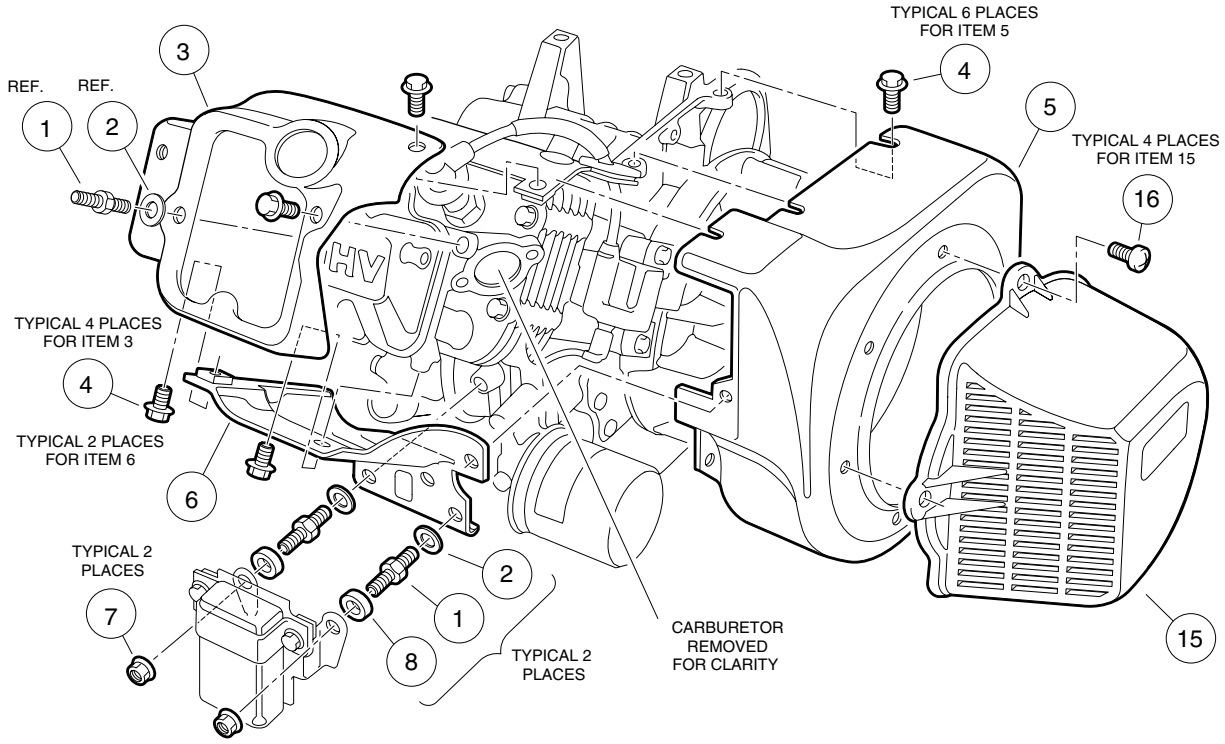

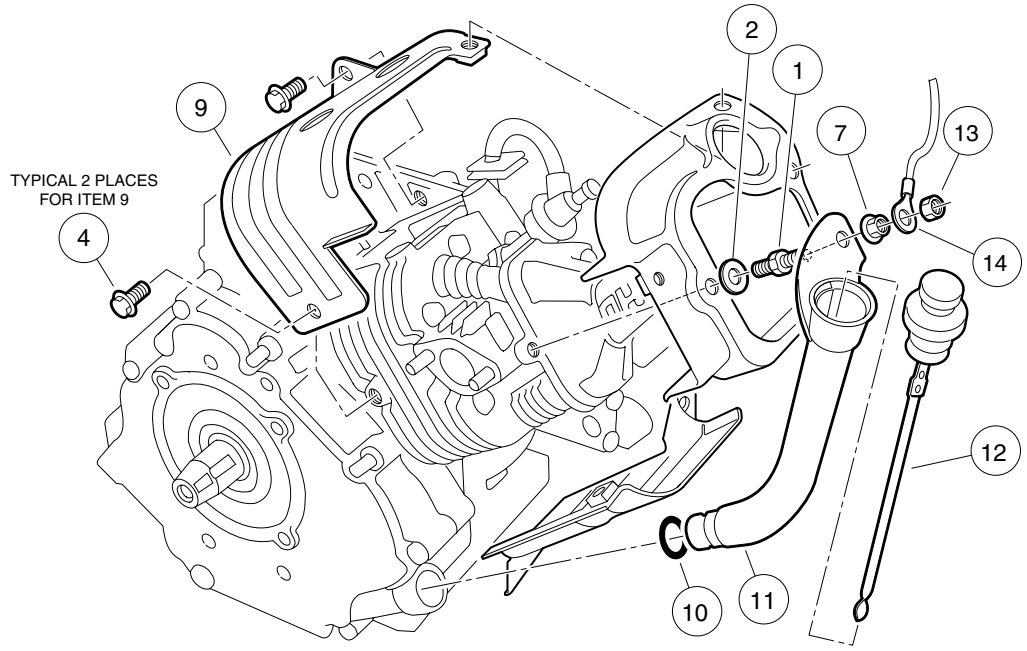

FE350 ENGINE – SHROUDS AND BRACKETS

ITEM	PART NO.	DESCRIPTION	QTY
		1 2 3 4	
	101953802	FE350 OHV Gasoline Engine, Complete (clockwise rotation) with Automatic Compression Release (ACR) and with Carburetor (key-start vehicles) (does not include items 13 - 16)	1
1	1016507	Bolt, 2-Ended, M6 x 1 x 29 mm	3
2	N/A	Washer, Flat, 6 mm	3
3	1017474	Shroud, Cylinder Head	1
4	1016456	Bolt, Flanged, M6 x 1 x 12 mm	14
5	101916101	Housing, Fan	1
6	1017476	Shroud, Lower Cylinder	1
7	1016547	Nut, Flanged, M6 x 1	3
8	1017500	Spacer	2
9	1017475	Shroud, Upper Cylinder	1
10	1016539	O-Ring	1
11	1017486	Tube, Oil Filler	1
12	1016531	Dipstick	1
13	101887601	Nut, Nylon Lock, M6 x 1	1
14	1015332	Wire Assembly, #10 Braided Ground	1
15	1015649	Shroud, Fan	1
16	1015969	Screw, Pan-Head, M6 x 1 x 14 mm	4

FE350 ENGINE

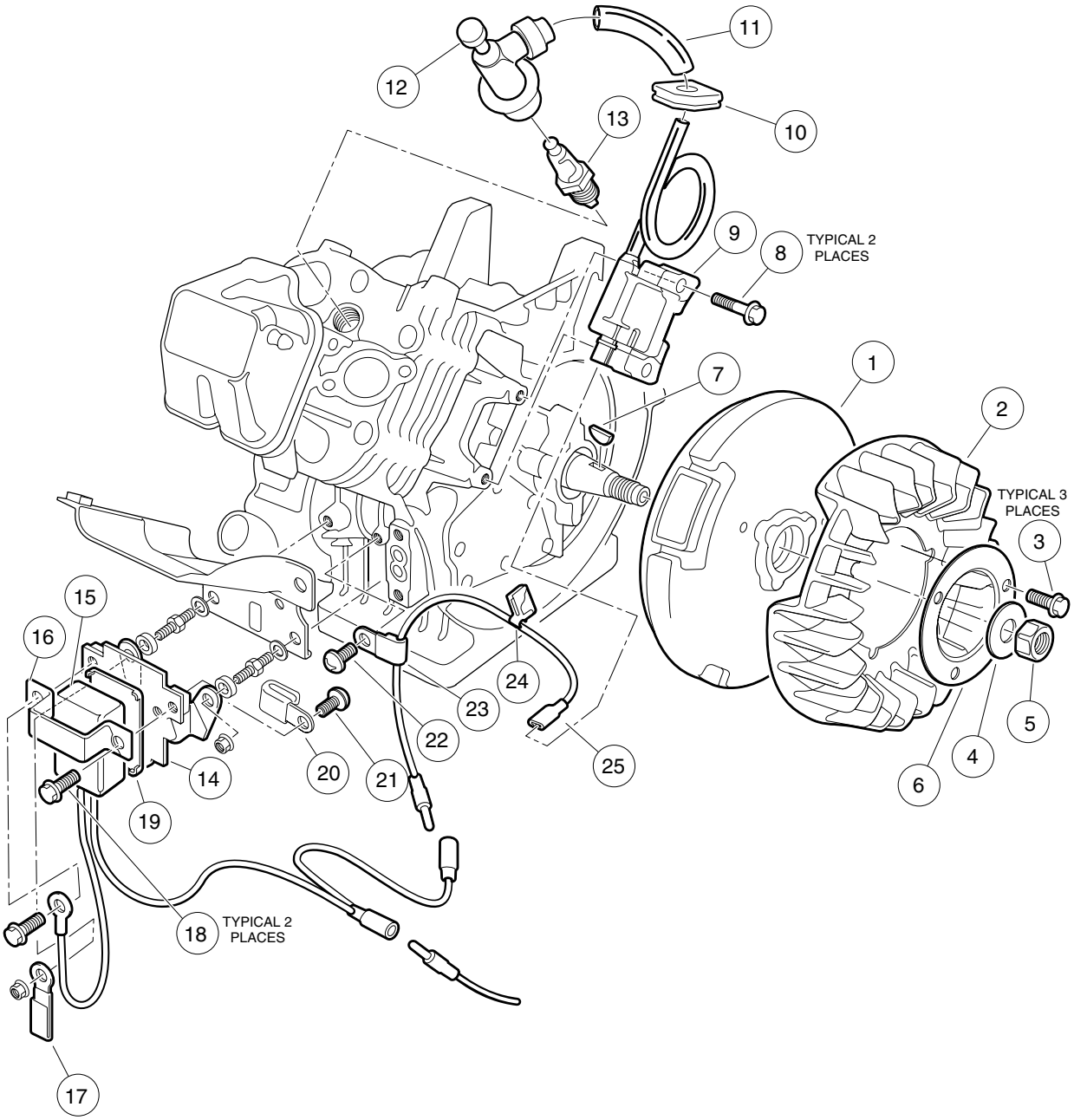

FE350 ENGINE – IGNITION COMPONENTS AND FLYWHEEL

ITEM	PART NO.	DESCRIPTION	QTY
		1 2 3 4	
1	101916201	Flywheel	1
2	101916301	Fan, Flywheel – Gray	1
3	1017448	Screw, Flanged Hex-Head, M6 x 1 x 10 mm	3
4	1017490	Washer, Flat, 18 mm	1
5	N/A	Nut, Hex, Fine, 18 mm	1
6	1017455	Plate, Flywheel Fan	1
7	1016562	Key	1
8	1016455	Screw, Hex-Head Flanged, M5 x 0.8 x 25 mm	2
9	101909201	Coil, Ignition (with internal igniter)	1
10	1016578	Grommet	1
11	1016588	Tube, 7 mm I.D. x 10 mm O.D. x 70 mm Long	1
12	1017463	Assembly, Plug Cap	1
13	101881101	Plug, Spark, OHV (Autolite)	1
13	AM10724	Plug, Spark, OHV (NGK)	1
14	1016445	Bracket, RPM Limiter	1
15	101909401	Limiter, RPM	1
16	1016579	Band, RPM Limiter Mount	1
17	1012981	Clamp	1
18	1016456	Screw, Flanged Hex-Head, M6 x 1 x 12 mm	2
19	1016586	Damper	1
20	101909501	Clamp	1
21	1016497	Screw, Cross Pan-Head, M5 x 0.8 x 8 mm	1
22	1016544	Screw, Cross Pan-Head Self-Tapping, M5 x 12 mm	1
23	1016561	Clamp	1
24	1016587	Clamp	1
25	101909301	Wire, Lead	1

FE350 ENGINE

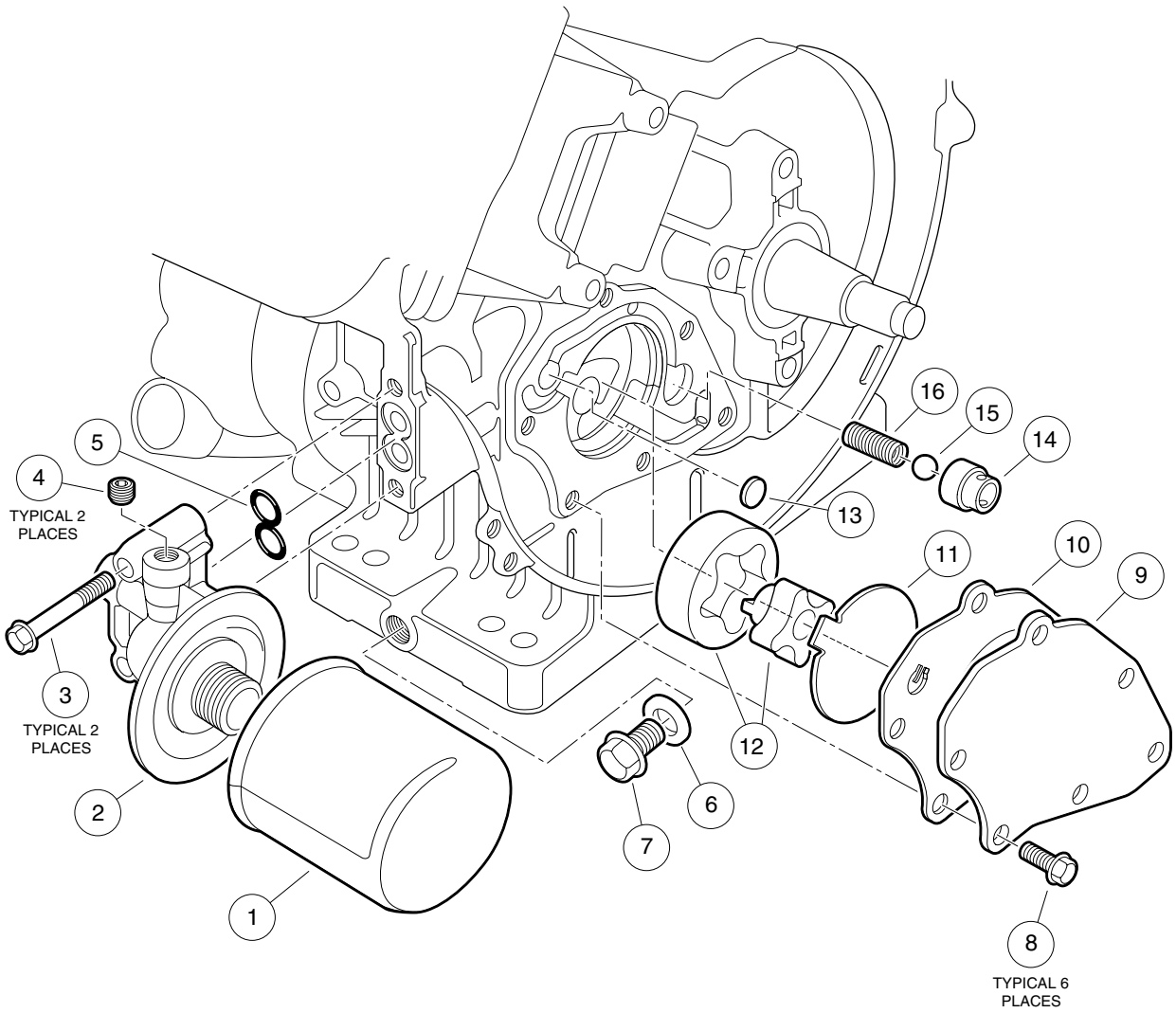

ITEM	PART NO.	DESCRIPTION	QTY
		1 2 3 4	
1	1016467	Oil Filter	1
2	1016502	Bracket, Oil Filter	1
3	1016457	Bolt, Flanged Hex-Head, M6 x 1 x 40 mm	2
4	1017507	Plug	2
5	1016570	O-Ring, Oil Filter Mount	1
6	1016432	Gasket, Drain Plug	1
7	1016576	Plug, Drain	1
8	1017456	Screw, Flanged Hex-Head, M6 x 1 x 12 mm	6
9	1017460	Cover, Pump	1
10	1017442	Gasket, Oil Pump	1
11	1016473	Plate, Oil Pump	1
12	101648203	Pump, Oil and Rotor	1
13	1017458	Filter	1
14	1016429	Seat, Valve	1
15	1016537	Ball, Steel Pressure Relief	1
16	1016581	Spring	1

FE350 ENGINE

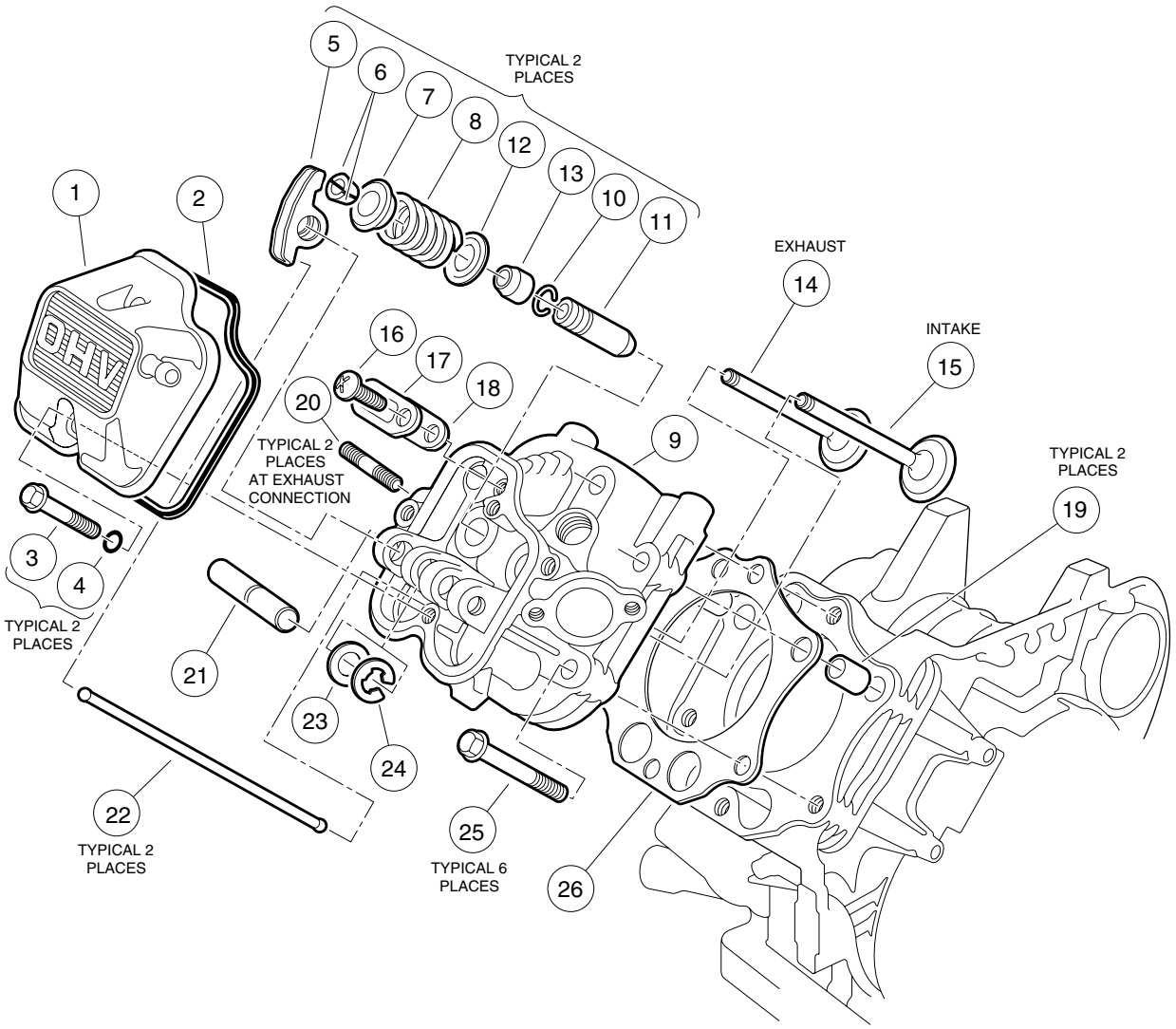

ITEM	PART NO.	DESCRIPTION	QTY
		1 2 3 4	
1	1016442	Case, Rocker	1
2	1016436	Gasket, Rocker Case	1
3	1016583	Bolt, Flanged, M6 x 1 x 35 mm	2
4	1016569	O-Ring	2
5	1017446	Arm, Rocker	2
6	1016450	Collet	4
7	1016449	Retainer, Valve Spring	2
8	1017473	Spring, Engine Valve	2
9	1017435	Assembly, Cylinder Head, FE350 (includes items 10 and 11)	1
10	1016560	Ring, Snap	2
11	1016519	Guide, Intake Valve	1
11	1016518	Guide, Exhaust Valve	1
12	1016479	Seat, Spring	2
13	1016566	Seal, Valve	2
14	1017445	Valve, Exhaust	1
15	1017444	Valve, Intake	1
16	1016544	Screw, Cross Pan-Head Self-Tapping, M5 x 0.8 x 12 mm	1
17	1016474	Plate	1
18	1016483	Valve	1
19	1016563	Pin, Hollow	2
20	1016489	Bolt, Stud, M8 x 1.25 x 29 mm	2
21	1016452	Shaft, Rocker	1
22	1017454	Rod, Push	2
23	1016549	Washer, Flat, M12	1
24	1016517	Circlip, Type-E	1
25	1016458	Bolt, Flanged, M8 x 1.25 x 45 mm	6
26	1017434	Gasket, Head	1
27	102304801	Kit, Gasket, FE350 (contains one each of all internal gaskets for FE350 engine) (not shown)	1

FE350 ENGINE

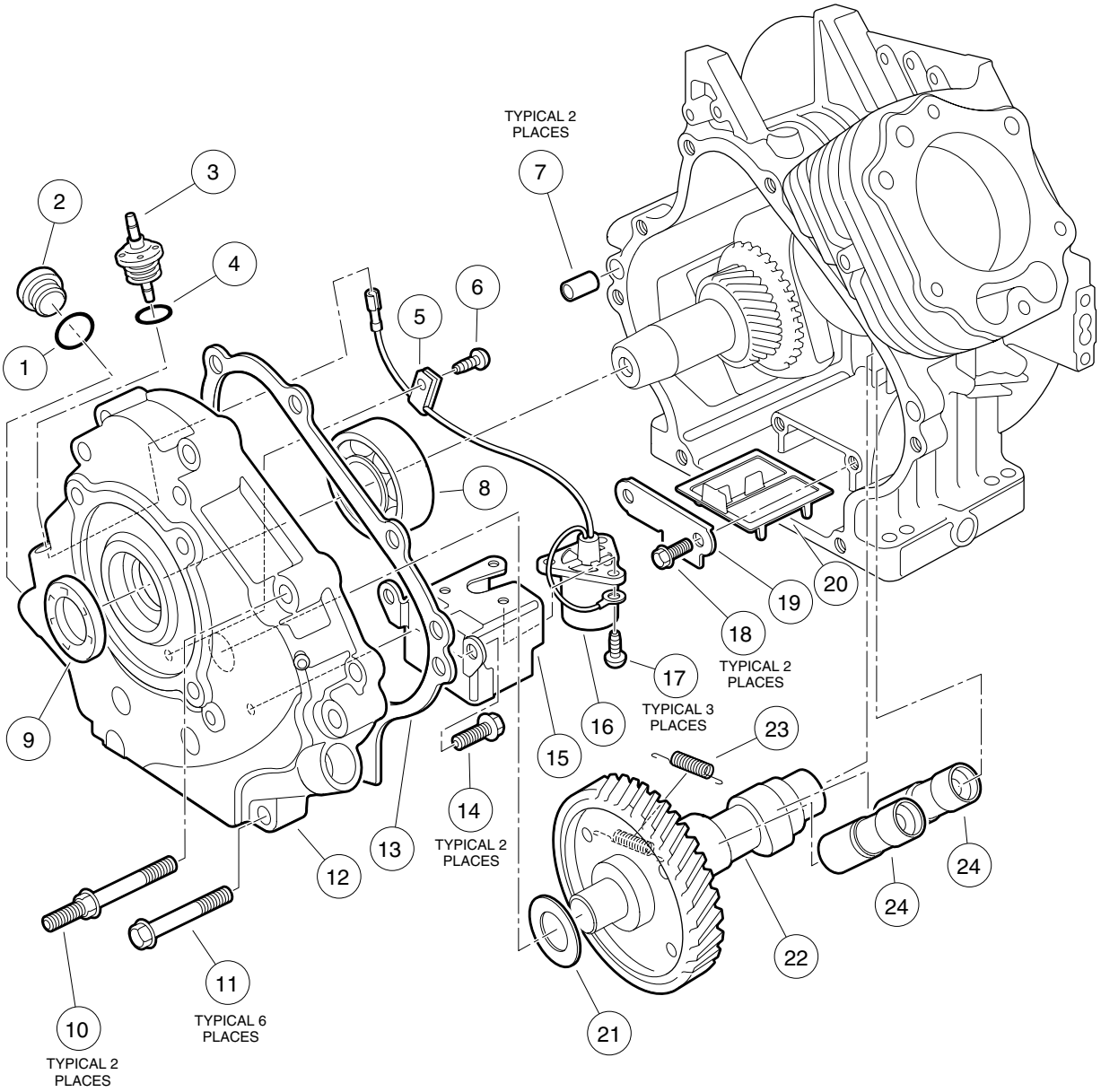

FE350 ENGINE – CRANKCASE, CAMSHAFT AND OIL SENSOR

ITEM	PART NO.	DESCRIPTION	QTY
		1 2 3 4	
1	1016538	O-Ring	1
2	1017508	Plug	1
3	1016535	Connector, Cord	1
4	1016538	O-Ring	1
5	1016506	Clamp	1
6	1016544	Screw, Cross Pan-Head Self-Tapping, M5 x 0.8 x 12 mm	1
7	1016564	Pin, Hollow	2
8	1017487	Bearing, Crankshaft	1
9	1017504	Seal, Crankshaft	1
10	1016584	Bolt, 2-Ended Flanged, M8 x 1.25 x 69 mm	2
11	1017514	Bolt, Flanged, M8 x 1.25 x 45 mm	6
12	1017472	Cover, Crankcase	1
13	1017443	Gasket, Crankcase Cover	1
14	1017513	Bolt, Flanged, M6 x 1 x 12 mm	2
15	1016510	Bracket, Oil Level Switch	1
16	1016494	Sensor, Oil Level	1
17	1016496	Screw, Cross Pan-Head, M4 x 0.7 x 8 mm	3
18	1016454	Bolt, Flanged, M5 x 0.8 x 8 mm	2
19	1016472	Plate, Oil Filter Screen	1
20	1016521	Screen, Oil Filter	1
21	101751801	Shim, 0.3 mm Thick	A/R
21	101751802	Shim, 0.4 mm Thick	A/R
21	101751803	Shim, 0.5 mm Thick	A/R
22	101915901	Camshaft (with automatic compression release) (for engines with serial numbers lower than 094171) (includes item 23)	1
22	102271601	Camshaft (with automatic compression release) (for engines with serial numbers 094171 and greater) (includes item 23)	1
23	1017511	Spring	1
24	1017447	Lifter, Hydraulic	2
25	102304801	Kit, Gasket, FE350 (contains one each of all internal gaskets for FE350 engine) (not shown)	1

FE350 ENGINE

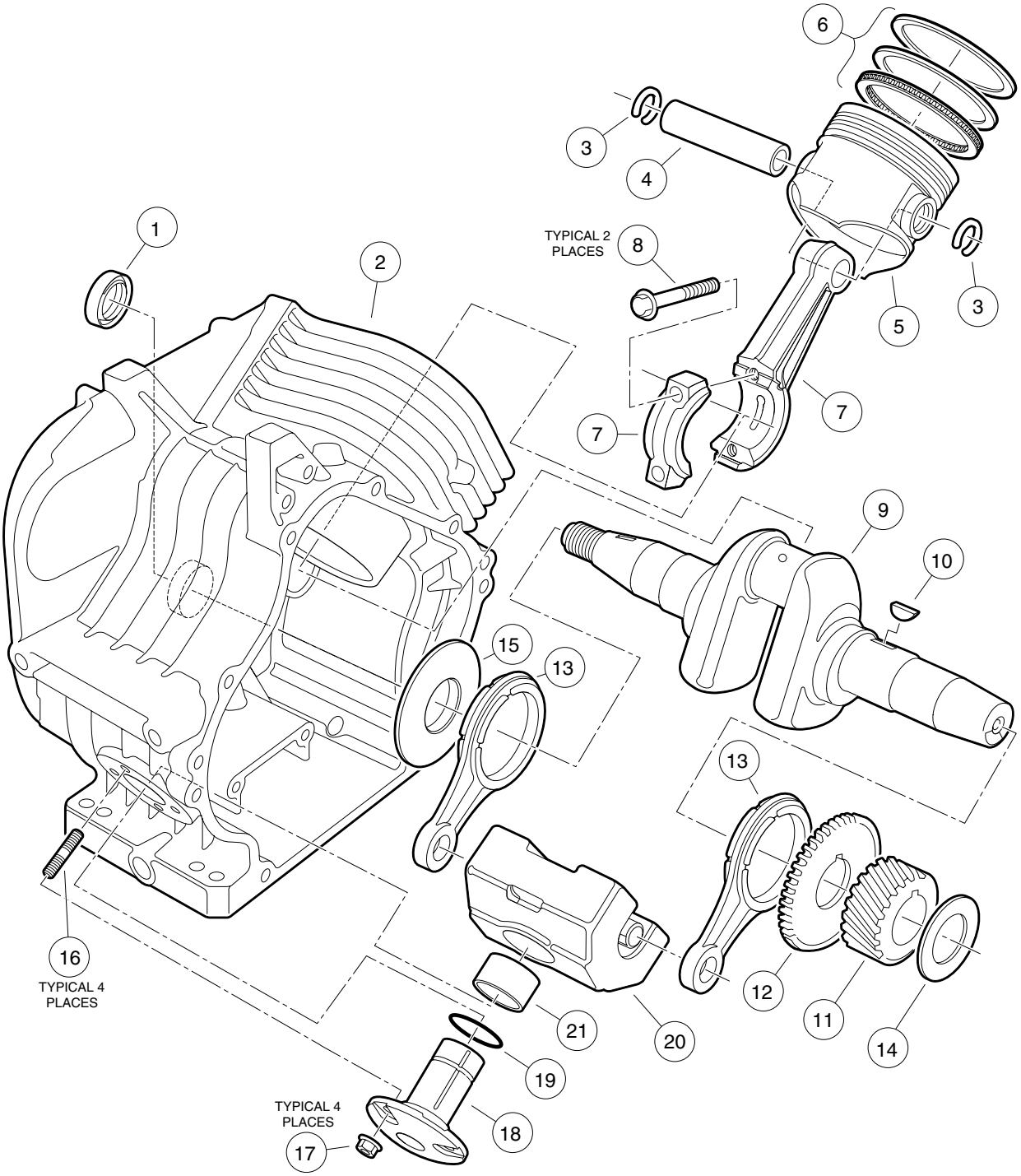

ITEM	PART NO.	DESCRIPTION	QTY
		1 2 3 4	
1	1017503	Seal, Oil	1
2	101916001	Crankcase, FE350 (clockwise rotation)	1
3	1017502	Ring, Snap	2
4	1017450	Pin, Piston	1
5	101744901	Piston, Standard	1
5	101744902	Piston, .50 mm Oversized	1
6	101745101	Ring Set, Piston, Standard	1
6	101745102	Ring Set, Piston, .50 mm Oversized	1
7	101745701	Assembly, Connecting Rod, Standard (includes 2 each of item 8)	1
7	101745702	Assembly, Connecting Rod, .50 mm Undersized (includes 2 each of item 8)	1
8	102272201	Bolt, Hex-Head, M8 x 1.25 x 42 mm	2
9	101922302	Crankshaft, FE350 (left-hand threads) (for engines with serial numbers lower than 094171) (includes items 10 - 12 and one each of item 13)	1
9	102430901	Crankshaft, FE350 (left-hand threads) (for engines with serial numbers 094171 and greater (includes items 10 - 12 and one each of item 13)	1
10	1016562	Key	1
11	N/A	Gear, Helical	1
12	N/A	Gear, Spur	1
13	1017471	Rod, Connecting	2
14	101773301	Shim, Crankshaft, 1.18 mm Thick	A/R
14	101773302	Shim, Crankshaft, 1.25 mm Thick	A/R
14	101773303	Shim, Crankshaft, 1.32 mm Thick	A/R
14	101773304	Shim, Crankshaft, 1.39 mm Thick	A/R
14	101773305	Shim, Crankshaft, 1.46 mm Thick	A/R
14	101773306	Shim, Crankshaft, 1.53 mm Thick	A/R
14	101773307	Shim, Crankshaft, 1.60 mm Thick	A/R
14	101773308	Shim, Crankshaft, 1.67 mm Thick	A/R
14	101773309	Shim, Crankshaft, 1.74 mm Thick	A/R
14	101773310	Shim, Crankshaft, 1.11 mm Thick	A/R
14	101773311	Shim, Crankshaft, 1.81 mm Thick	A/R
15	1017501	Spacer	1
16	1016541	Bolt, Stud, M6 x 1 x 22 mm	4
17	1016547	Nut, Flanged, M6 x 1	4
18	1016470	Shaft, Guide Counterbalance	1
19	1016571	O-Ring	1
20	1017453	Weight, Counterbalance (includes item 21)	1
21	1017510	Bearing	1

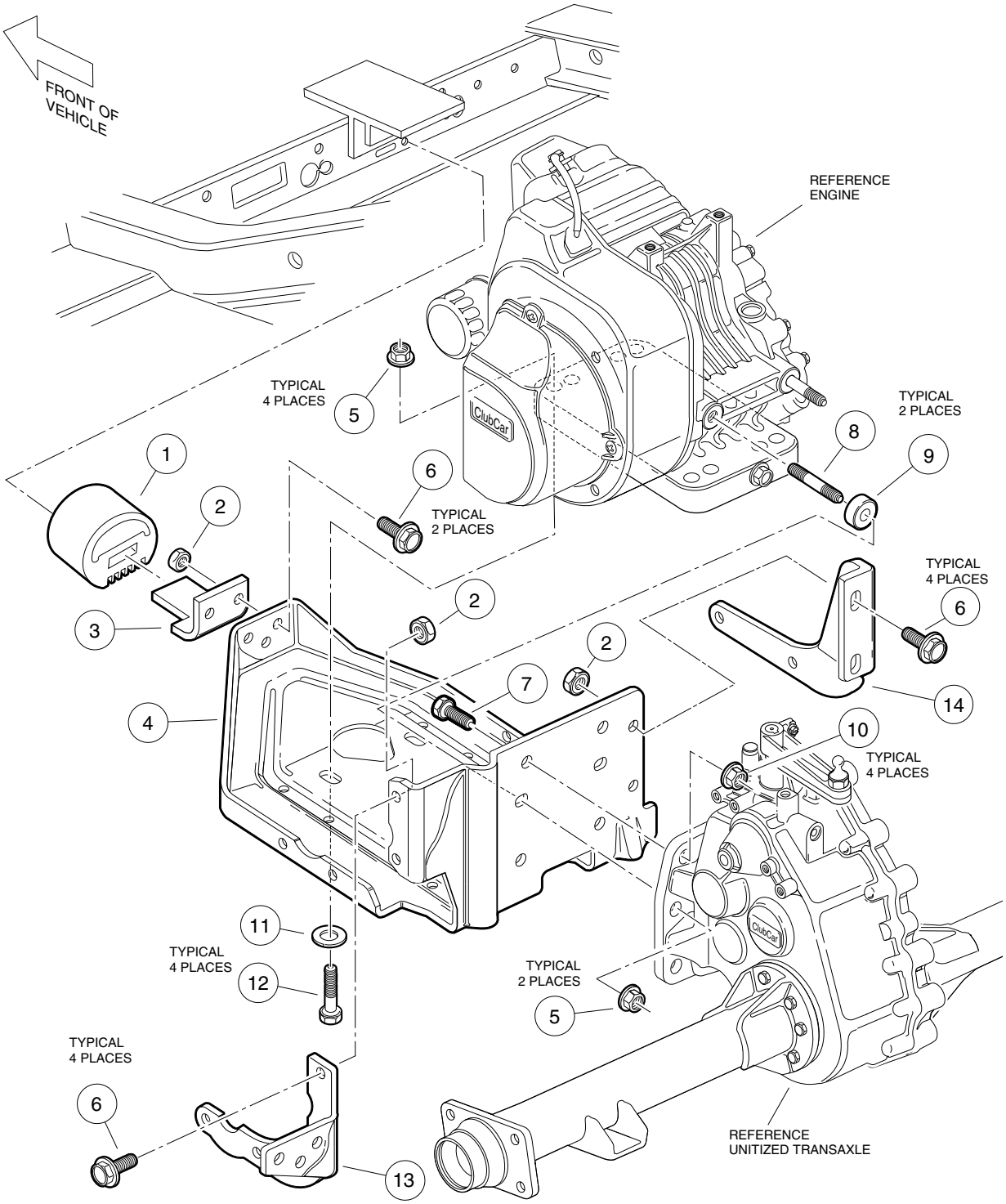
FRONT OF VEHICLE
REFERENCE ENGINE
TYPICAL 4 PLACES
5
TYPICAL 2 PLACES
8
9
1
6
TYPICAL 2 PLACES
2
TYPICAL 4 PLACES
6
3
2
2
7
14
4
10
TYPICAL 4 PLACES
11
TYPICAL 4 PLACES
12
TYPICAL 2 PLACES
5
TYPICAL 4 PLACES
6
13
REFERENCE UNITIZED TRANSAXLE

ITEM	PART NO.	DESCRIPTION	QTY
		1 2 3 4	
1	1012164	Snubber	1
2	1013924	Nut, Hex Lock, 5/16-24, UNF	6
3	101834601	Bracket, Snubber	1
4	101827101	Plate, Mounting	1
5	101833001	Nut, Flange, M8 x 1.25	6
6	101884801	Screw, Hex Washer, 5/16-24 x 7/8	10
7	101833301	Screw, Hex-Head Cap, M10 x 1.25 x 30 mm	4
8	101833201	Stud, M8 x 1.25 x 60 mm (Villager 4)	2
8	101833101	Stud, M8 x 1.25 x 50 mm (Villager 6, Villager 8, TransPorter 4, and TransPorter 6 vehicles)	2
9	101832101	Spacer (Villager 4 only)	2
9	1011697	Washer, Flat, 5/16 (Villager 6, Villager 8, TransPorter 4, and TransPorter 6)	2
10	101832901	Nut, Flange, M10 x 1.25	4
11	1012571	Washer, Heavy Flat, 5/16	4
12	101855901	Screw, Hex-Head Cap, M8 x 1.25 x 43 mm	4
13	101832701	Stiffener, Flywheel Side	1
14	101832601	Stiffener, PTO Side (Villager 6, Villager 8, TransPorter 4, and TransPorter 6)	1

7

G

FUEL, INTAKE, AND GOVERNOR SYSTEMS

8

G

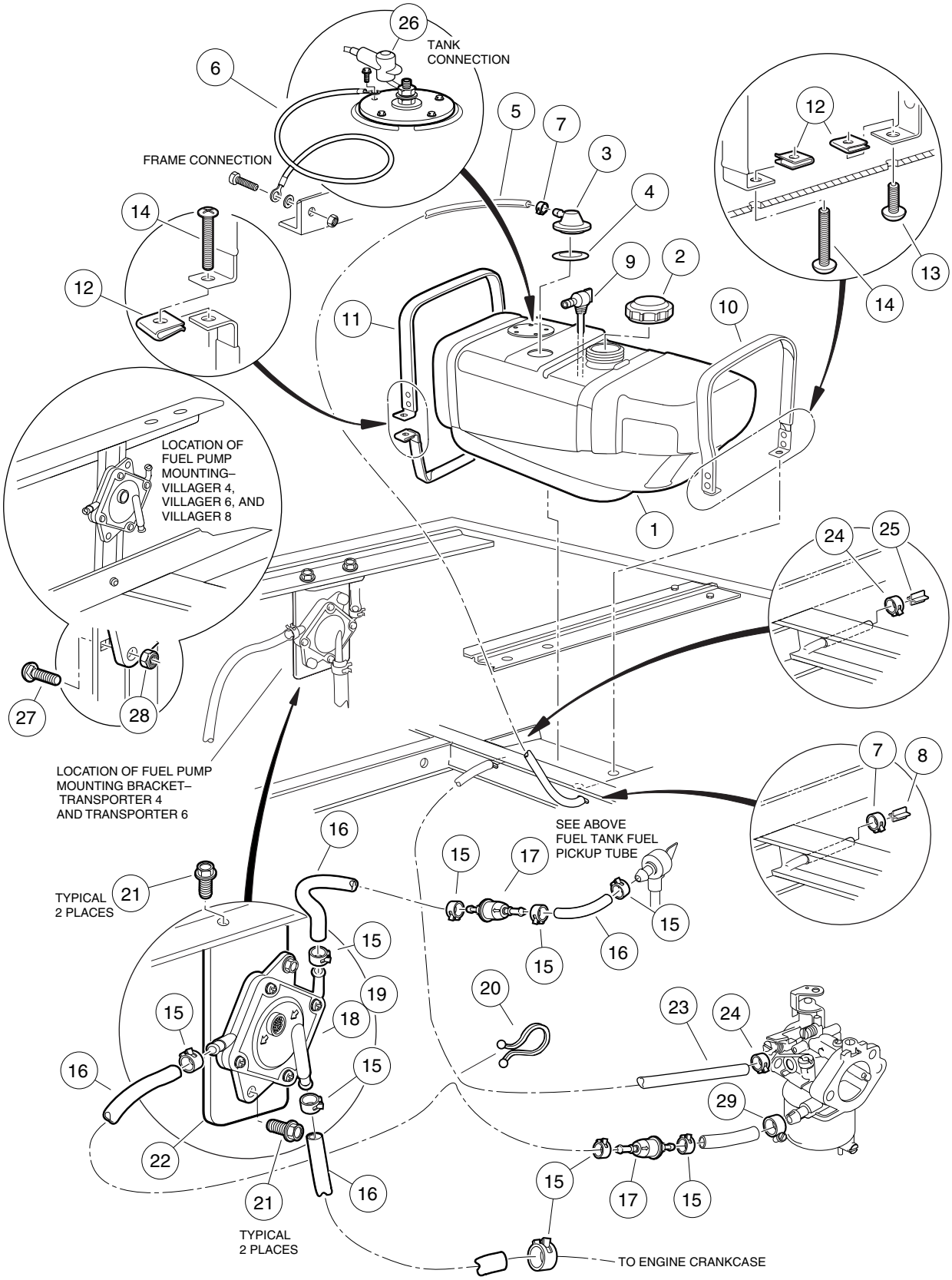
26
TANK CONNECTION
6
FRAME CONNECTION
5
7
3
4
12
14
12
9
2
11
10
13
14
LOCATION OF FUEL PUMP MOUNTING– VILLAGER 4, VILLAGER 6, AND VILLAGER 8
1
24
25
27
28
LOCATION OF FUEL PUMP MOUNTING BRACKET– TRANSPORTER 4 AND TRANSPORTER 6
7
8
SEE ABOVE FUEL TANK FUEL PICKUP TUBE
16
15
17
TYPICAL 2 PLACES
21
15
15
16
15
19
20
23
24
15
18
16
15
29
22
15
17
15
21
16
TYPICAL 2 PLACES
TO ENGINE CRANKCASE

ITEM	PART NO.	DESCRIPTION	QTY
		1 2 3 4	
1	1016004	Kit, Fuel Tank, with Sending Unit (includes items 2 - 9)	1
2	1015188	Cap, Fuel Tank, Nonvented	1
3	1015143	Assembly, Fuel Tank Vent	1
4	1015139	Grommet, Insulation	1
5	1015137	Line, Bulk Vent (available by the foot)	A/R
6	N/A	Wire Assembly, #16 Black	1
7	1013746	Clamp, Hose – Gray	2
8	101824401	Barb, Vent	1
9	101896901	Valve, Fuel Pickup Tube with Shut-off	1
10	1014928	Assembly, Rear Fuel Strap	1
11	101955301	Assembly, Front Fuel Strap	1
12	1014116	Nut, U-Type Speed, 1/4-20	3
13	8248	Screw, Phillips Truss-Head, 1/4-20 x 3/4	1
14	1011988	Screw, Phillips Truss-Head, 1/4-20 x 2	2
15	1012649	Clamp, Hose – Red	9
16	1013692	Line, Bulk Fuel (available by the foot*)	A/R
17	102003201	Filter, Fuel	2
18	1014523	Pump, Fuel Impulse	1
19	1014524	Kit, Rebuild, Fuel Impulse Pump	A/R
20	101987701	Clamp, Plastic	1
21	1012285	Screw, Thread-Rolling, 1/4-20 x 5/8	4
22	101929501	Bracket, Fuel Pump Mounting (TransPorter 4 and TransPorter 6 only)	1
23	1015137	Line, Bulk Vent (available by the foot)	A/R
24	1013746	Clamp, Hose – Gray	2
25	101824401	Barb, Vent	1
26	N/A	Boot, Rubber	1
27	1017203	Bolt, Carriage, 1/4-20 x 1 (Villager 4, Villager 6, and Villager 8 only)	2
28	8233	Nut, Nylon Lock, 1/4-20 (Villager 4, Villager 6, and Villager 8 only)	2
29	1013687	Clamp, Hose, 3/8	1

* Total fuel line lengths:
Villager 4, Villager 6, and Villager 8 – 47 inches (119.4 cm)
TransPorter 4 and TransPorter 6 – 43 inches (109.2 cm)

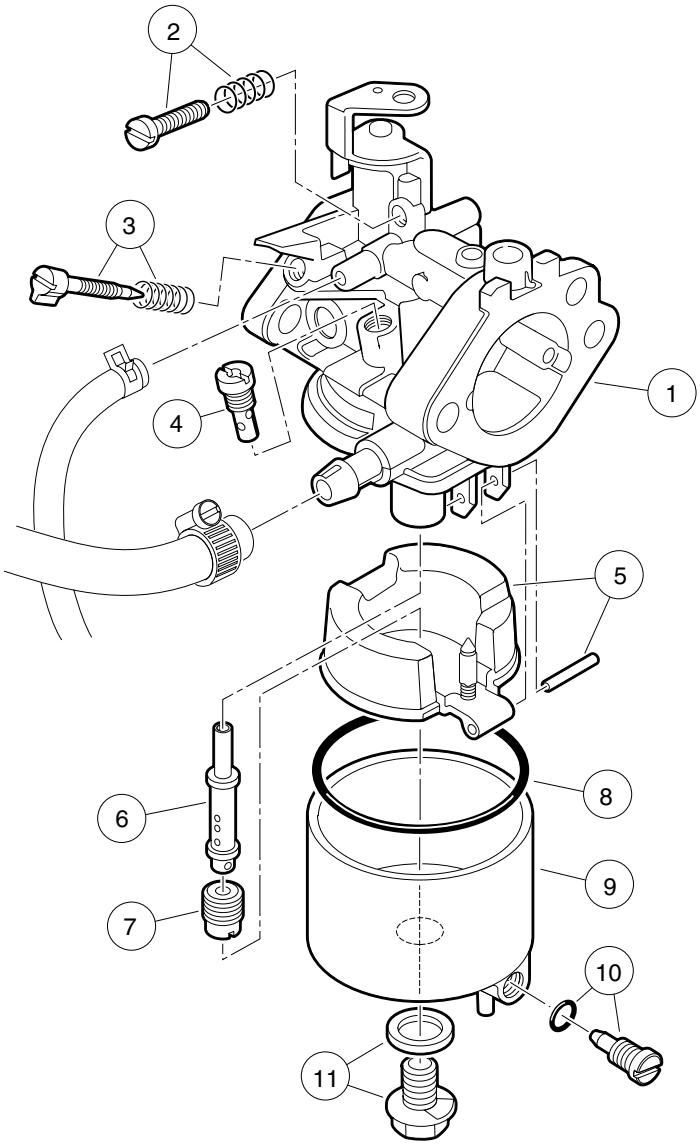
2
3
4
1
5
6
8
9
7
10
11

CARBURETOR ASSEMBLY, FE290 ENGINE – VILLAGER 4

ITEM	PART NO.	DESCRIPTION	QTY
		1 2 3 4	
1	101905601	Assembly, Carburetor (FE290 engine) (includes items 2 - 11)	1
2	1016501	Assembly, Idle Screw	1
3	N/A	Assembly, Pilot Air Screw	1
4	101973101	Jet, Pilot, #40	1
5	1016486	Assembly, Float	1
6	101973201	Nozzle, Main (FE290 engine)	1
		Standard Jetting:	
7	101642582	Jet, Main, 0 - 3,000 Feet (0 - 914.4 m)	1
7	101642580	Jet, Main, 3,000 - 5,000 Feet (914.4 - 1524 m)	A/R
7	101642578	Jet, Main, 5,000 - 8,000 Feet (1524 - 2438.4 m)	A/R
7	101642575	Jet, Main, 8,000 - 10,000 Feet (2438.4 - 3048 m)	A/R
7	101642572	Jet, Main, 10,000 Feet and Above (3048 m and above)	A/R
8	1016437	Gasket, Float Chamber	1
9	1017461	Assembly, Float Chamber (includes item 10)	1
10	1016499	Assembly, Screw	1
11	1016585	Assembly, Bolt	1

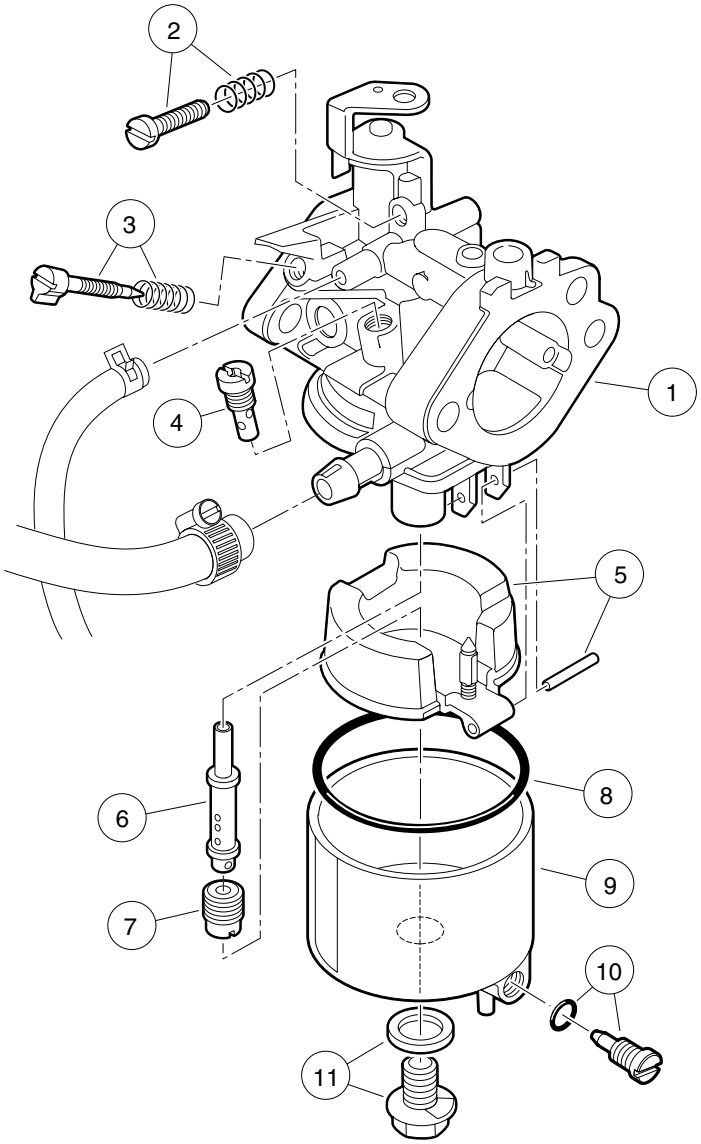
2
3
4
1
5
6
8
9
7
10
11

CARBURETOR ASSEMBLY, FE350 ENGINE – VILLAGER 6, VILLAGER 8, TRANSPORTER 4, AND TRANSPORTER 6

ITEM	PART NO.	DESCRIPTION	QTY
		1 2 3 4	
1	101905901	Assembly, Carburetor (FE350 engine) (includes items 2 - 11)	1
2	1016501	Assembly, Idle Screw	1
3	N/A	Assembly, Pilot Air Screw	1
4	101973101	Jet, Pilot, #40	1
5	1016486	Assembly, Float	1
6	101973301	Nozzle, Main (FE350 engine)	1
		Standard Jetting:	
7	101642585	Jet, Main, 0 - 3,000 Feet (0 - 914.4 m)	1
7	101642582	Jet, Main, 3,000 - 5,000 Feet (914.4 - 1524 m)	A/R
7	101642580	Jet, Main, 5,000 - 8,000 Feet (1524 - 2438.4 m)	A/R
7	101642578	Jet, Main, 8,000 - 10,000 Feet (2438.4 - 3048 m)	A/R
7	101642575	Jet, Main, 10,000 Feet and Above (3048 m and above)	A/R
8	1016437	Gasket, Float Chamber	1
9	1017461	Assembly, Float Chamber (includes item 10)	1
10	1016499	Assembly, Screw	1
11	1016585	Assembly, Bolt	1

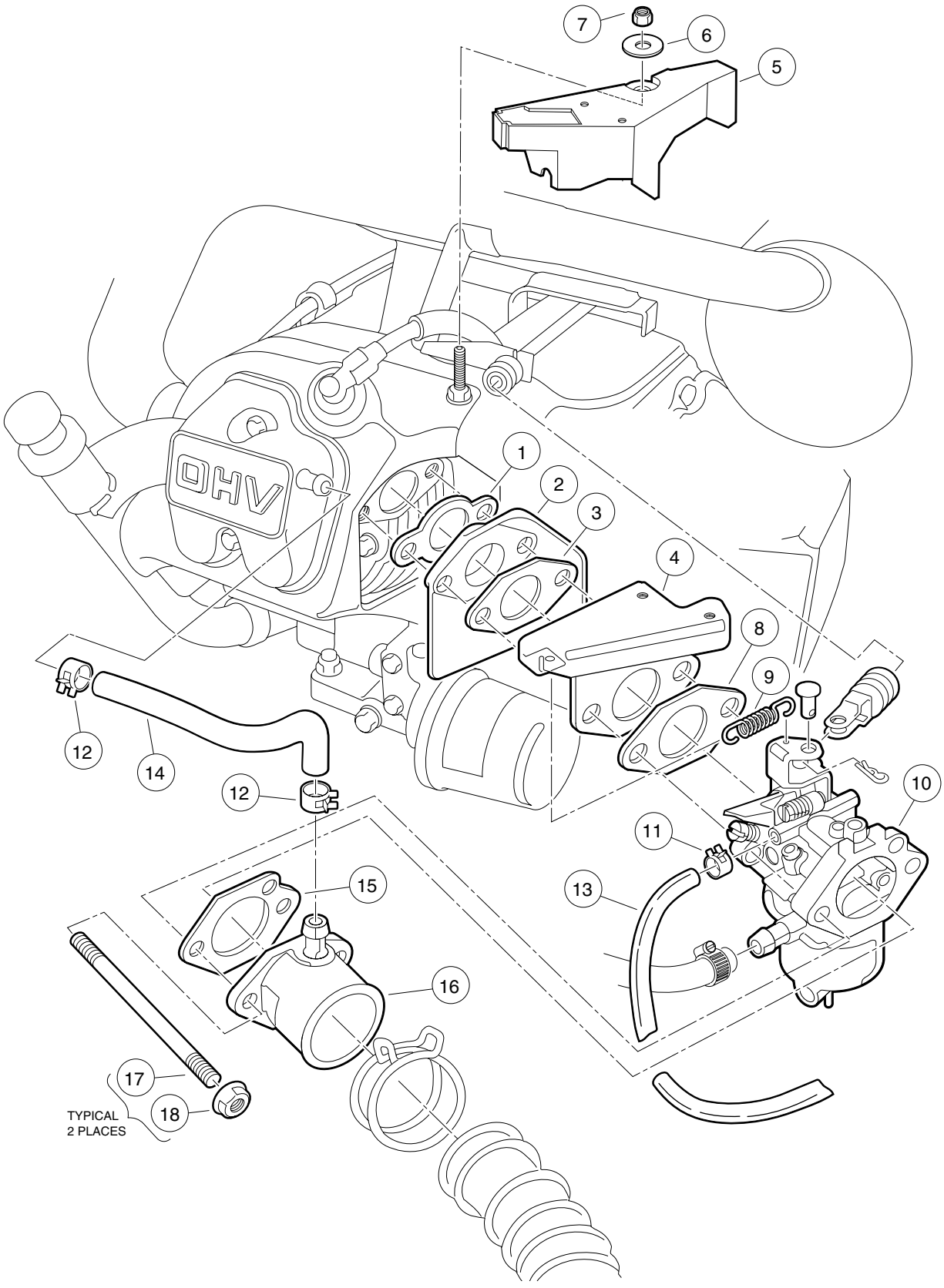
7
6
5
OHV
1
2
3
4
8
9
12
14
12
10
11
13
15
16
17
18
TYPICAL
2 PLACES

CARBURETOR INSTALLATION

ITEM	PART NO.	DESCRIPTION	QTY
		1 2 3 4	
1	1016440	Gasket, Insulator	1
2	101648102	Insulator, Carburetor	1
3	1016439	Gasket, Carburetor Insulator to Throttle Bracket (Villager 4)	1
3	101973401	Gasket, Carburetor Insulator to Throttle Bracket (Villager 6, Villager 8, TransPorter 4, and TransPorter 6)	1
4	1016444	Bracket, Throttle	1
5	101820201	Guard, Governor (Villager 4 only)	1
6	1011697	Washer, Flat, 5/16 (Villager 4 only)	1
7	101887601	Nut, Nylon Lock, M6 x 1 (Villager 4 only)	1
8	1016441	Gasket, Throttle Bracket to Carburetor	1
9	1016582	Spring, Throttle Return	1
10	101905601	Assembly, Carburetor (Villager 4)	1
10	101905901	Assembly, Carburetor (Villager 6, Villager 8, TransPorter 4, and TransPorter 6)	1
11	1013746	Clamp, Hose – Gray	1
12	1017466	Clamp, Hose – Bronze	2
13	1015137	Line, Bulk Vent	A/R
14	1016572	Tube, Crankcase Vent	1
15	1016438	Gasket, Carburetor to Intake Manifold	1
16	1016480	Pipe, Intake	1
17	101649002	Screw, 2-Ended Stud, M6 x 1 x 90mm	2
18	1016547	Nut, Flanged, M6 x 1	2

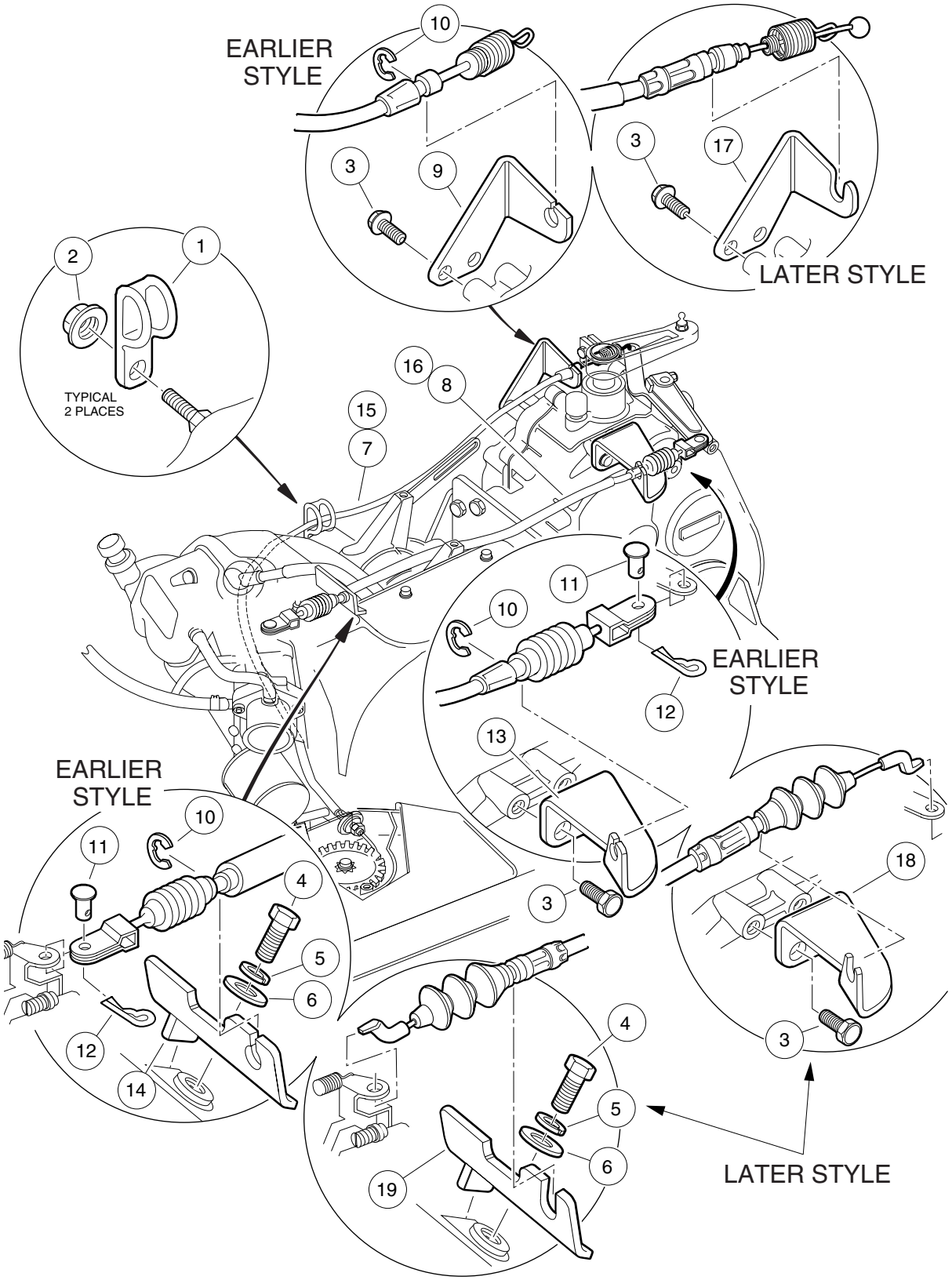
EARLIER STYLE
LATER STYLE
TYPICAL 2 PLACES
EARLIER STYLE
EARLIER STYLE
LATER STYLE

GOVERNOR AND ACCELERATOR CABLES

ITEM	PART NO.	DESCRIPTION	QTY
		1 2 3 4	
1	1013700	Clamp, Cable Retaining	2
2	1016546	Nut, Flanged Hex, M8 x 1.25	2
3	1012285	Screw, Thread Rolling, 1/4-20 x 5/8	4
4	101903501	Screw, Hex-Head Cap, M8 x 1.25 x 24 mm	1
5	7174	Washer, Lock, 5/16	1
6	1011697	Washer, Flat, 5/16	1
		Earlier style cables (2001, 2002, and early 2003 models)*:	
7	101832501	Cable, Accelerator	1
8	101832401	Cable, Governor (Villager 4 only)	1
8	101832402	Cable, Governor (Villager 6, Villager 8, TransPorter 4, and TransPorter 6)	1
9	101832301	Bracket, Accelerator Support	1
10	1016202	E-Ring	3
11	1015408	Pin, Governor Cable Clevis	2
12	1014413	Pin, Hair Spring Cotter, 1/8 I.D. x 5/8	2
13	101832201	Bracket, Support	1
14	1015845	Bracket, Governor Cable Engine	1
		Later style cables (beginning mid-model year 2003)*:	
15	102336101	Cable, Accelerator, Snap-in	1
16	102336001	Cable, Governor, Snap-in	1
17	101832302	Bracket, Accelerator Support	1
18	101832202	Bracket, Support	1
19	101584502	Bracket, Governor Cable Engine	1
		* Brackets and cables must be of the same style.	

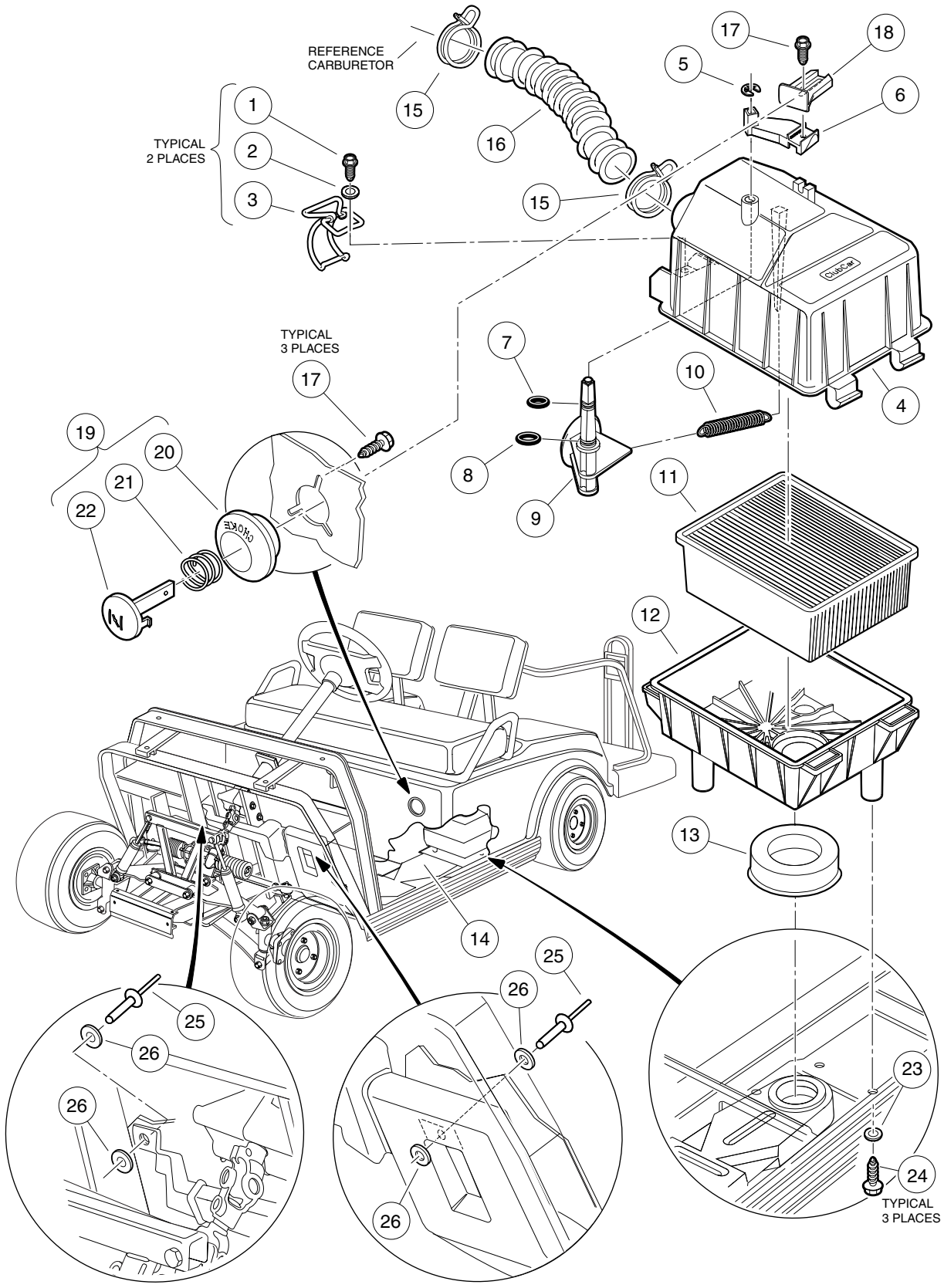
REFERENCE
CARBURETOR
TYPICAL
2 PLACES
TYPICAL
3 PLACES
TYPICAL
3 PLACES
1
2
3
4
5
6
7
8
9
10
11
12
13
14
15
16
17
18
19
20
21
22
23
24
25
26

INTAKE DUCT, CHOKE, AND AIR BOX ASSEMBLY – VILLAGER 4

ITEM	PART NO.	DESCRIPTION	QTY
		1 2 3 4	
	101821501	Assembly, Air Box (includes items 1 - 13)	1
1	101804301	Screw, Hi-Lo Hex-Head, #8-1/2	2
2	101881701	Washer, Stainless Steel, #8	2
3	101925701	Latch, Wire	2
4	101972801	Assembly, Air Box Top (includes items 5 - 10)	1
5	101813001	E-Clip	1
6	101917601	Lever, Choke	1
7	N/A	O-Ring, 5/16 (red)	1
8	N/A	O-Ring, 3/8 (green)	1
9	N/A	Valve, Choke	1
10	101812301	Spring, Return	1
11	1015426	Filter, Air	1
12	101811901	Bottom, Air Box	1
13	101921501	Seal, Intake	1
14	101958101	Assembly, Air Duct	1
15	101971301	Clamp, Hose (air intake)	2
16	101837101	Hose, Intake	1
17	101850301	Screw, Hi-Lo, #12 x 1/2	4
18	101917701	Positioner, Choke	1
19	101805701	Assembly, Choke Button (includes items 20, 21 and 22)	1
20	101811501	Guide, Choke Lever	1
21	101856201	Spring, Compression	1
22	101811401	Lever, Choke	1
23	332	Washer, Flat, 1/4	3
24	1015752	Screw, Hi-Lo, #12-16 x 5/8	3
25	1606	Rivet, Pop, 3/16	2
26	183	Washer, Flat, #10	4

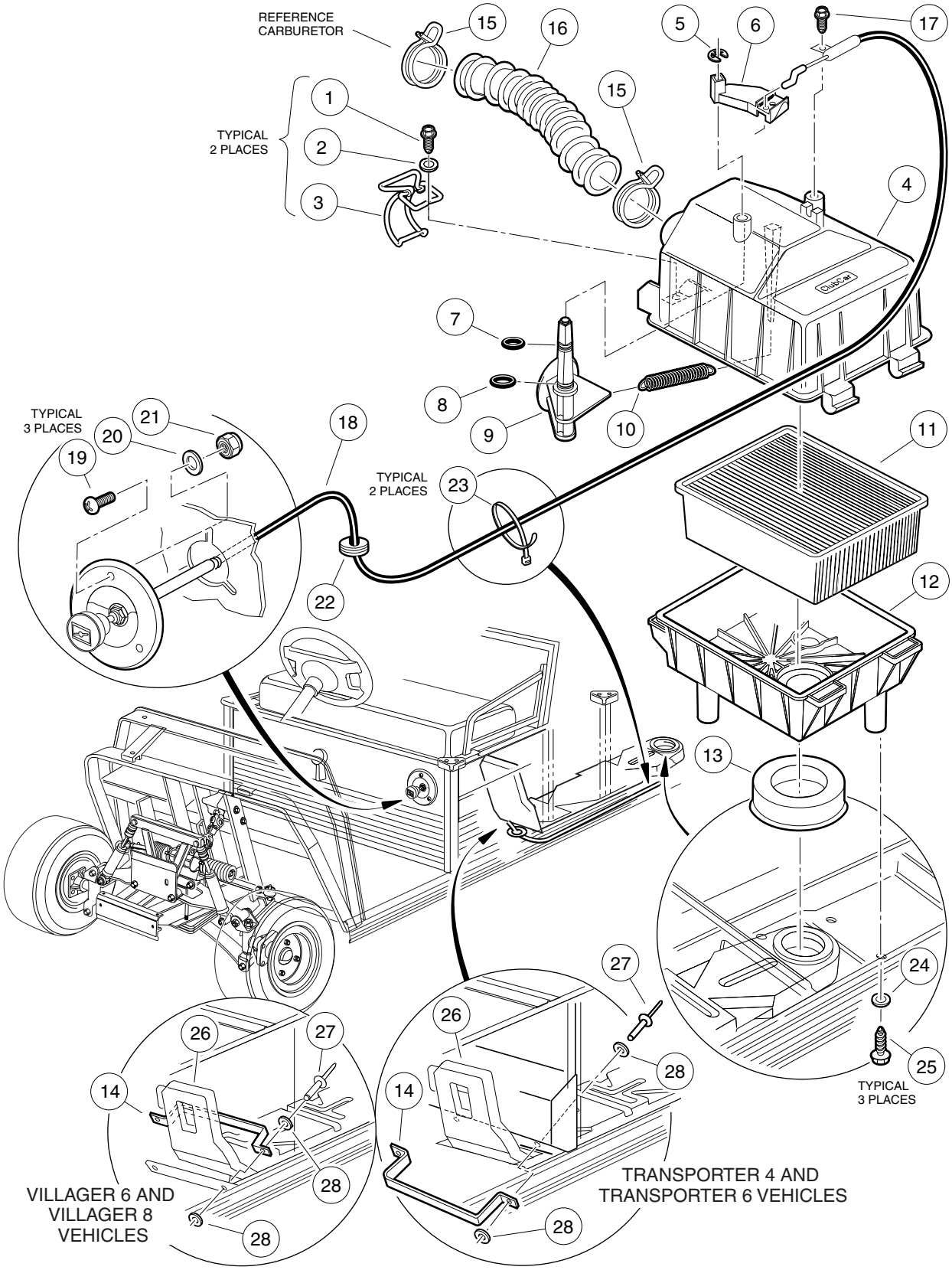
REFERENCE CARBURETOR
TYPICAL 2 PLACES
TYPICAL 3 PLACES
TYPICAL 2 PLACES
TYPICAL 3 PLACES
VILLAGER 6 AND VILLAGER 8 VEHICLES
TRANSPORTER 4 AND TRANSPORTER 6 VEHICLES

INTAKE DUCT, CHOKE, AND AIR BOX ASSEMBLY – VILLAGER 6 AND 8, TRANSPORTER 4 AND 6

ITEM	PART NO.	DESCRIPTION	QTY
		1 2 3 4	
	101821501	Assembly, Air Box (includes items 1 - 13)	1
1	101804301	Screw, Hex-Head Hi-Lo, #8-1/2	2
2	101881701	Washer, Stainless Steel, #8	2
3	101925701	Latch, Wire	2
4	101972801	Assembly, Air Box Top (includes items 5 - 10)	1
5	101813001	E-Clip	1
6	101917601	Lever, Choke	1
7	N/A	O-Ring, 5/16 (red)	1
8	N/A	O-Ring, 3/8 (green)	1
9	N/A	Valve, Choke	1
10	101812301	Spring, Return	1
11	1015426	Filter, Air	1
12	101811901	Bottom, Air Box	1
13	101921501	Seal, Intake	1
14	101825701	Bracket, Retaining	1
15	101971301	Clamp, Hose (air intake)	2
16	101837101	Hose, Intake	1
17	101804301	Screw, Hex-Head Hi-Lo, #8 x 1/2	1
18	101926802	Cable, Choke (Villager 6, TransPorter 4, and TransPorter 6)	1
18	101926803	Cable, Choke (Villager 8)	1
19	1631	Screw, Pan-Head, #10-24 x 3/4	3
20	183	Washer, #10	3
21	1012438	Nut, Nylon Lock, #10-24	3
22	1015139	Grommet (TransPorter 4 and TransPorter 6 only)	1
23	8168	Tie, Wire	2
24	332	Washer, Flat, 1/4	3
25	1015752	Screw, Hi-Lo, #12-16 x 5/8	3
26	101811301	Duct, Air	1
27	7973	Rivet, Pop, 3/16	2
28	183	Washer, Flat, #10	4

8
G

EXHAUST SYSTEM

9

G

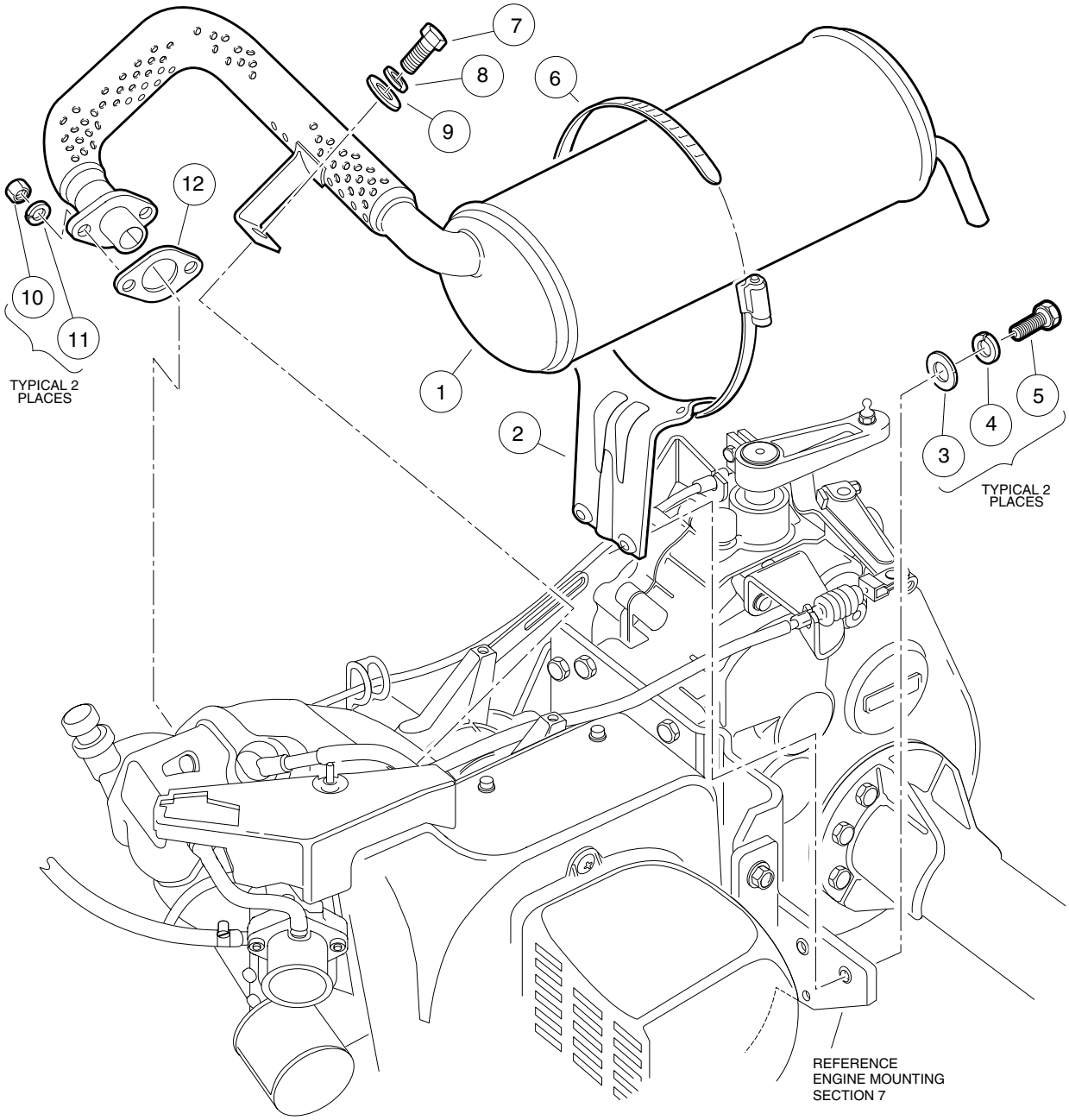
7
8
6
9
12
10
11
TYPICAL 2
PLACES
1
2
5
4
3
TYPICAL 2
PLACES
REFERENCE
ENGINE MOUNTING
SECTION 7

EXHAUST SYSTEM, FE290 – VILLAGER 4

ITEM	PART NO.	DESCRIPTION	QTY
		1 2 3 4	
1	101859301	System, Exhaust	1
2	1015814	Bracket, Muffler Mounting	1
3	332	Washer, Flat, 1/4	2
4	451	Washer, Lock, 1/4	2
5	7847	Screw, Hex-Head, 1/4-20 x 3/4	2
6	1017689	Clamp, Muffler	1
7	1012830	Screw, Hex-Head Cap, M8 x 1.25 x 22 mm	1
8	7174	Washer, Lock, 5/16	1
9	1241	Washer, Flat, 5/16	1
10	1012528	Nut, Hex, M8 x 1.25	2
11	1013734	Washer, Lock, 8 mm	2
12	1015330	Gasket, Exhaust	1

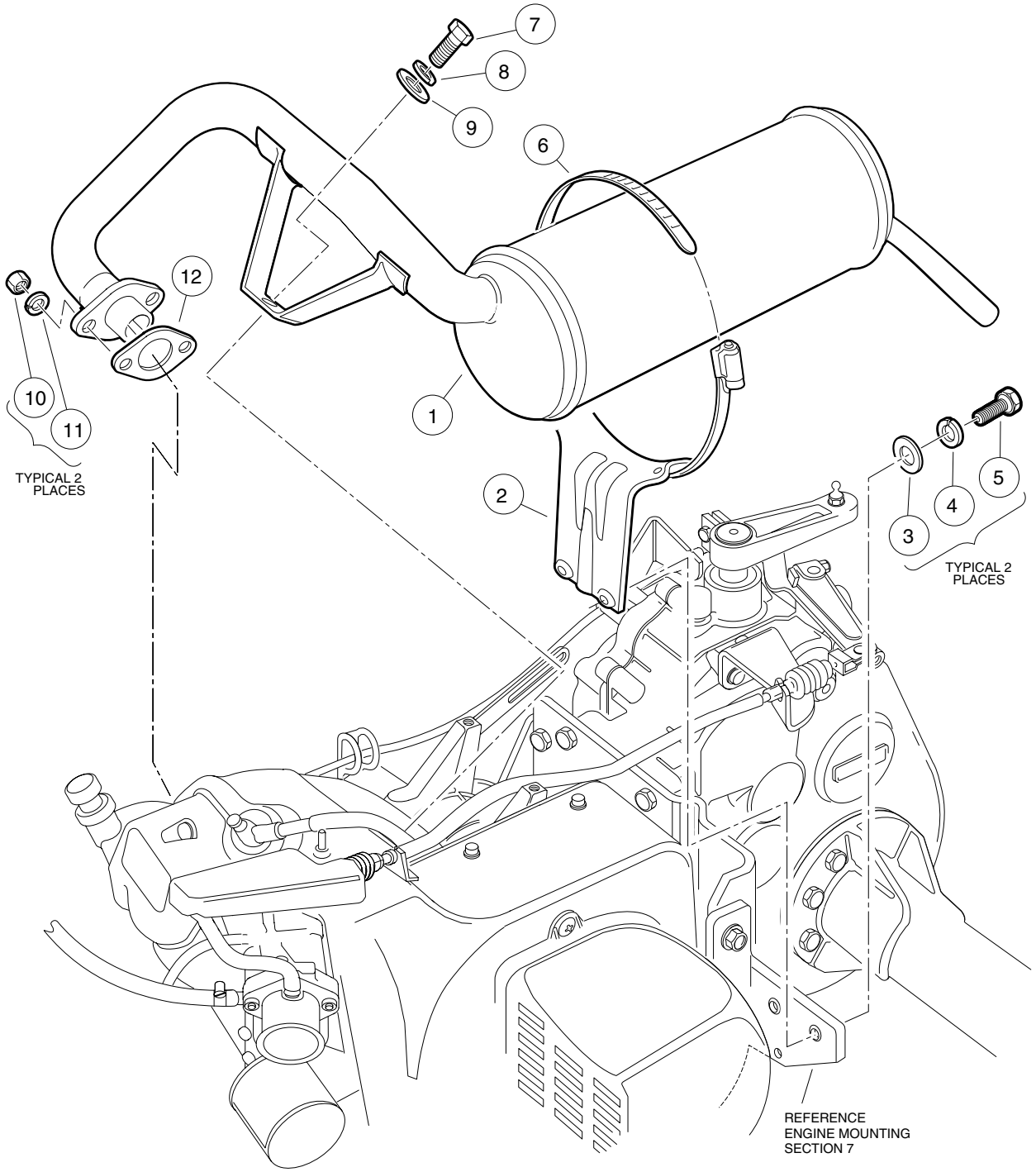
7
8
9
6
12
10
11
TYPICAL 2
PLACES
1
2
3
4
5
TYPICAL 2
PLACES
REFERENCE
ENGINE MOUNTING
SECTION 7

EXHAUST SYSTEM, FE350 – VILLAGER 6, VILLAGER 8, TRANSPORTER 4, AND TRANSPORTER 6

ITEM	PART NO.	DESCRIPTION	QTY
		1 2 3 4	
1	101859401	System, Exhaust	1
2	1015814	Bracket, Muffler Mounting	1
3	332	Washer, Flat, 1/4	2
4	451	Washer, Lock, 1/4	2
5	7847	Screw, Hex-Head Cap, 1/4-20 x 3/4	2
6	1017689	Clamp, Muffler	1
7	1012830	Screw, Hex-Head Cap, M8 x 1.25 x 22mm	1
8	7174	Washer, Lock, 5/16	1
9	1011697	Washer, Flat, 5/16	1
10	1012528	Nut, Hex, M8 X 1.25	2
11	1013734	Washer, Lock, 8mm	2
12	1016904	Gasket, Exhaust	1

9
G

TORQUE CONVERTER

10

G

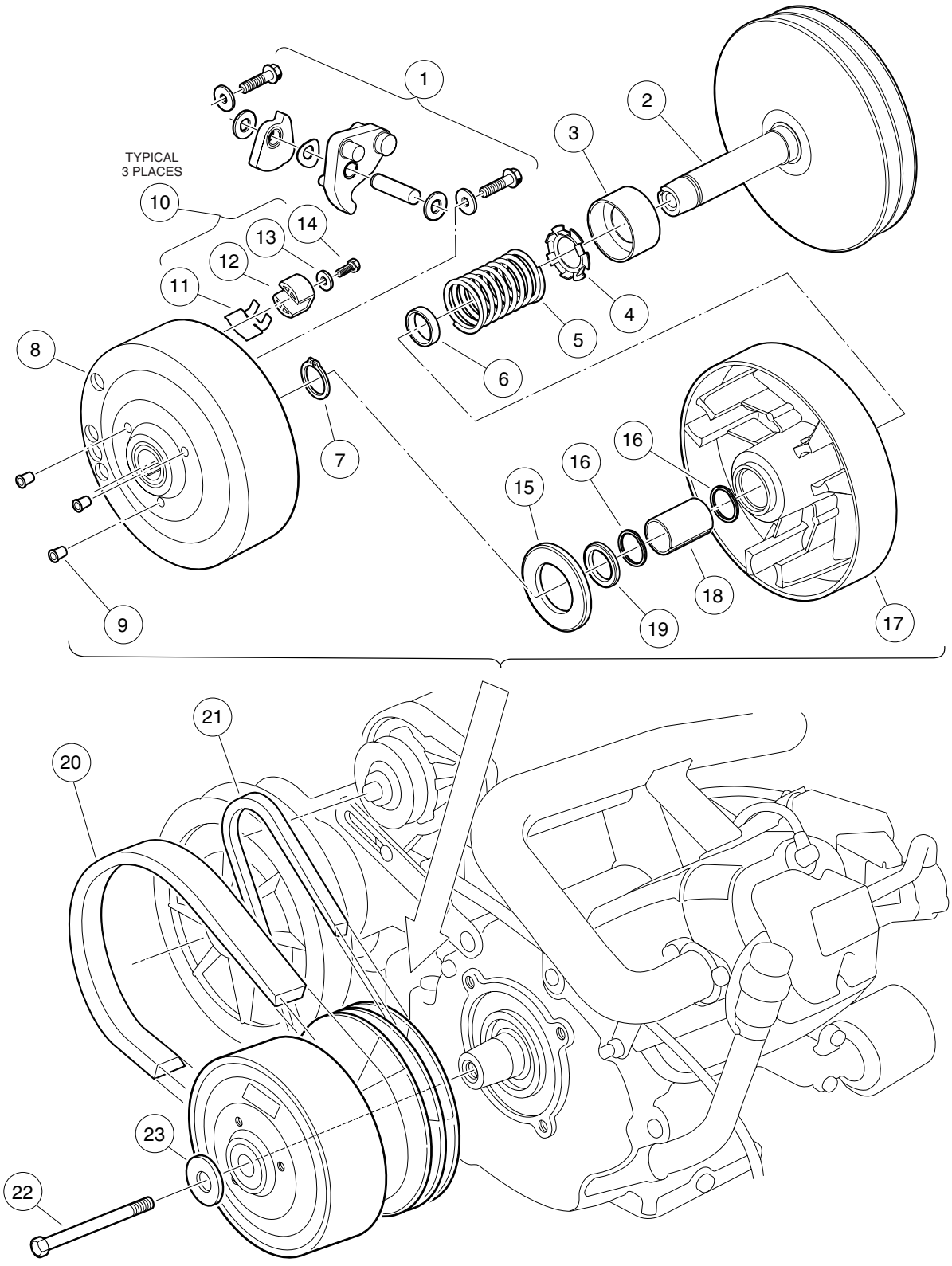
TYPICAL
3 PLACES
1
2
3
4
5
6
7
8
9
10
11
12
13
14
15
16
16
17
18
19
20
21
22
23

DRIVE CLUTCH

ITEM	PART NO.	DESCRIPTION	QTY
		1 2 3 4	
	101833902	Assembly, Drive Clutch (Villager 4) (includes items 1 - 19)	1
	101833904	Assembly, Drive Clutch (Villager 6, Villager 8, TransPorter 4, and TransPorter 6) (includes items 1 - 19)	1
1	1016801	Kit, Drive Clutch Weight	1
2	101929801	Assembly, Fixed Face (Villager 4)	1
2	101738301	Assembly, Fixed Face (Villager 6, Villager 8, TransPorter 4, and TransPorter 6)	1
3	1014049	Bearing, Idler	1
4	1014050	Retainer, Spring	1
5	1014051	Spring, Drive Clutch – Black (Villager 4)	1
5	1016901	Spring, Drive Clutch – Green (Villager 6, Villager 8, TransPorter 4, and TransPorter 6)	1
6	1016289	Spacer, Fixed Face Shaft	1
7	1014057	Ring, Retaining	1
8	1014059	Assembly, Drive Hub	1
9	N/A	Plug, Drive Clutch	3
10	1014453	Kit, Drive Clutch Button (includes item 11 - 14)	1
11	1014287	Spring, Drive Button	3
12	1014062	Driver, Drive Clutch	3
13	183	Washer, Flat, #10, Type A	3
14	8450	Screw, Hex-Head, #10-24 x .5	3
15	1014058	Washer, Thrust	1
16	1014056	Ring, Spiral Back-Up	2
17	1014052	Assembly, Movable Face (includes items 18 and 19)	1
18	N/A	Bushing	1
19	1014055	Retainer	1
20	1016203	Belt, Drive (Villager 4)	1
20	1017188	Belt, Drive (Villager 6, Villager 8, TransPorter 4, and TransPorter 6)	1
21	101916701	Belt, Starter/Generator	1
22	101916501	Screw, Hex-Head Cap, 3/8-24 x 5-1/2 (left-hand threads)	1
23	1017328	Washer, Drive Clutch – Green	1

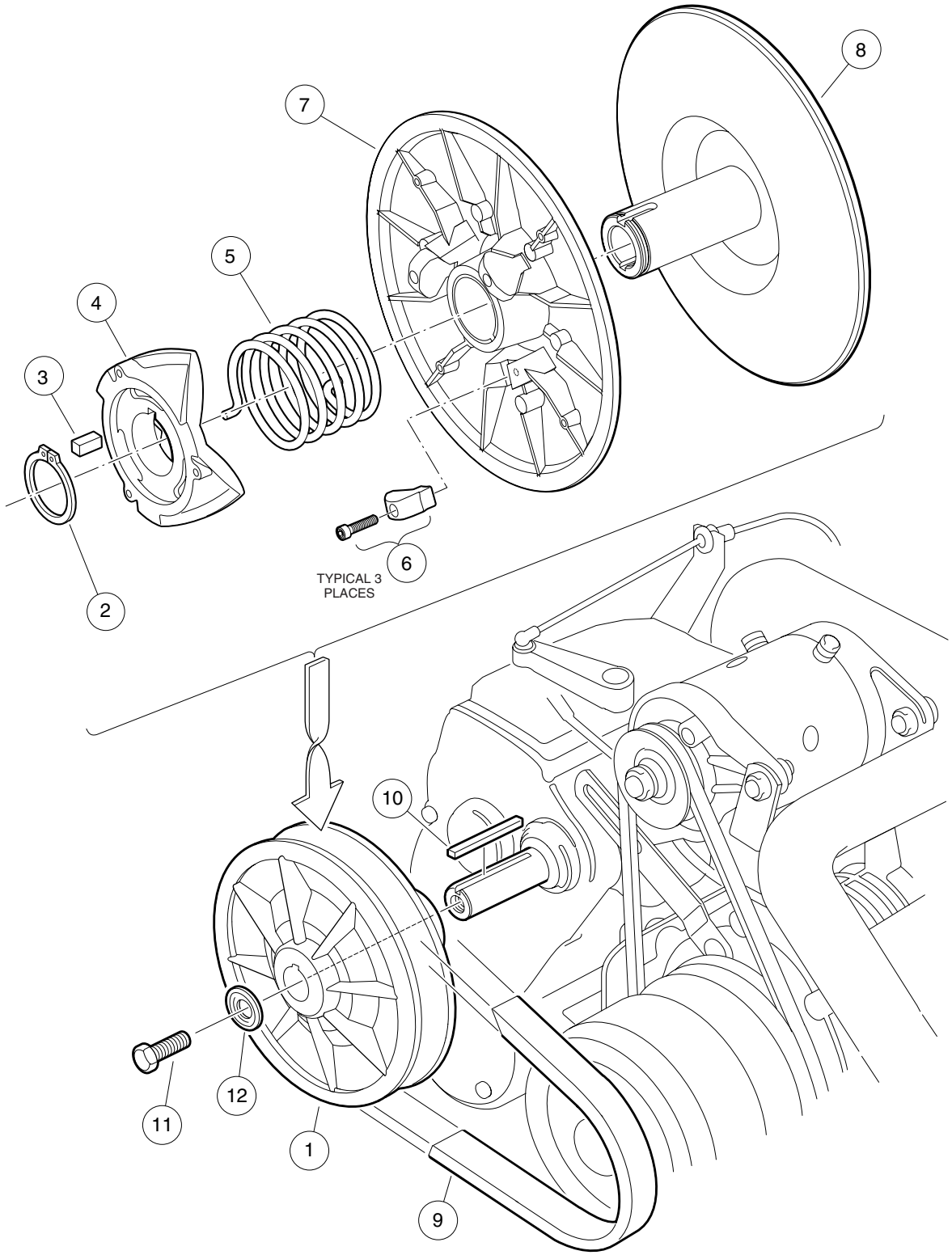
8
7
5
4
3
2
6
TYPICAL 3
PLACES
10
12
11
1
9

DRIVEN CLUTCH

ITEM	PART NO.	DESCRIPTION	QTY
		1 2 3 4	
1	101834001	Assembly, Driven Clutch (includes items 2 - 8)	1
2	1014080	Ring, Retaining	1
3	1014078	Key	1
4	1017686	Cam	1
5	101836201	Spring (green)	1
6	1014454	Kit, Driven Clutch Button (includes 3 screws and 3 buttons)	1
7	1014072	Assembly, Moveable Face with Bushing	1
8	1014070	Face, Fixed	1
9	1016203	Belt, Drive (Villager 4)	1
9	1017188	Belt, Drive (Villager 6, Villager 8, TransPorter 4, and TransPorter 6)	1
	AM10419	Kit, Driven Clutch Hardware Repair (includes items 10 - 12)	1
10	101833401	Key, Square Transmission	1
11	102242101	Screw, Hex-Head Cap, Thread-Locking, 5/16-18 x 3/4	1
12	1017327	Washer, Driven Clutch	1

10
G

UNITIZED TRANSAXLE – GASOLINE VEHICLE

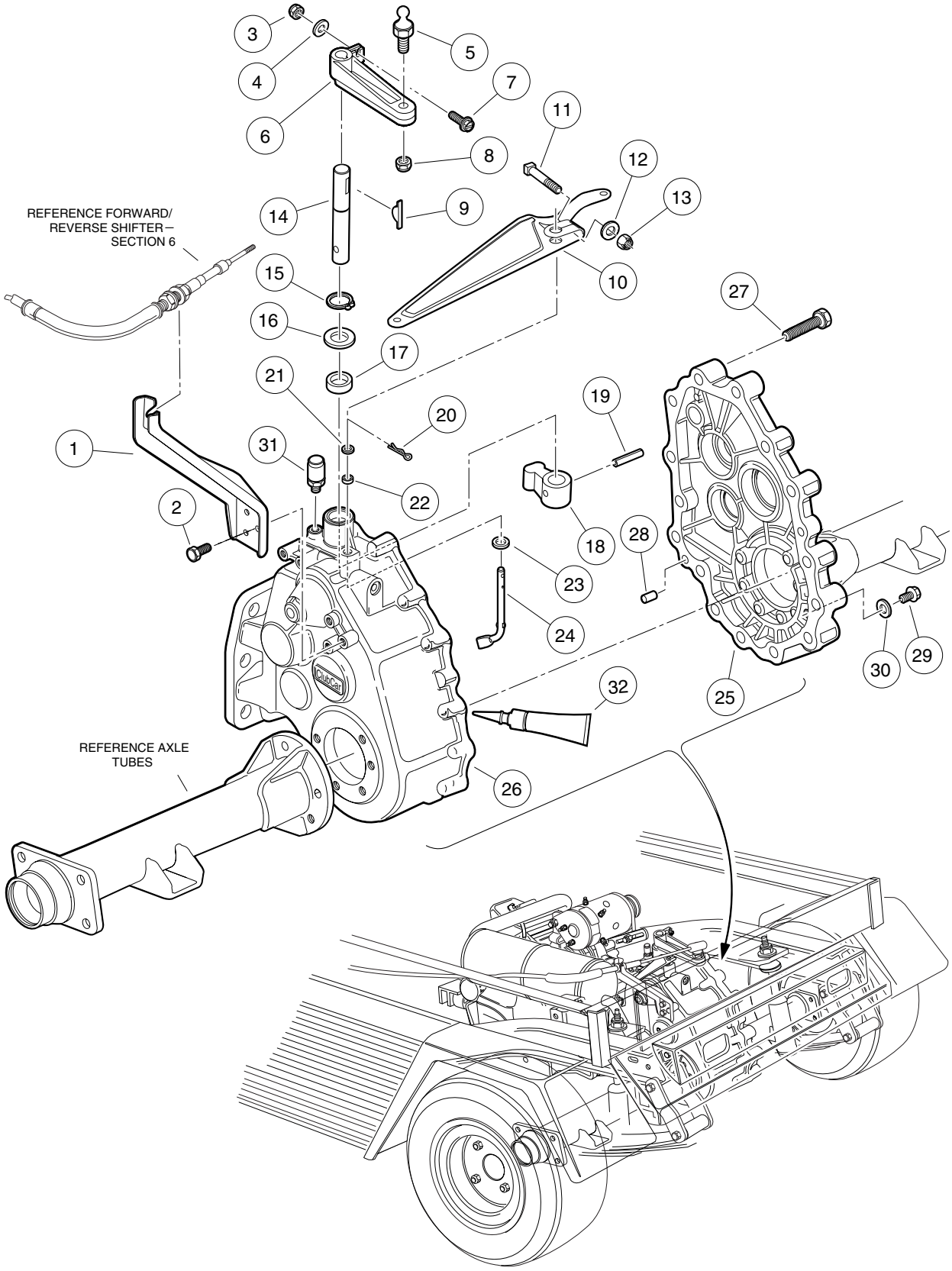
REFERENCE FORWARD/
REVERSE SHIFTER—
SECTION 6
REFERENCE AXLE
TUBES
1
2
3
4
5
6
7
8
9
10
11
12
13
14
15
16
17
18
19
20
21
22
23
24
25
26
27
28
29
30
31
32

UNITIZED TRANSAXLE, GASOLINE VEHICLE – GEAR CASES AND BRACKETS

ITEM	PART NO.	DESCRIPTION	QTY
		1 2 3 4	
1	102045901	Bracket, Transmission Cable Support	1
2	1012285	Screw, Thread-Rolling, 1/4-20 x 5/8	3
3	1013061	Nut, Nylon Lock, #10-32	1
4	183	Washer, Flat, #10	1
5	1010954	Stud, Ball, 1/4-28 x 9/16	1
6	1016341	Lever, Transmission Shifter	1
7	1017082	Screw, Hex Washer-Head, #10-32 x 3/4	1
8	8717	Nut, Nylon Lock, 1/4-28	1
9	1017231	Key, Woodruff	1
10	101834801	Arm, Governor Lever	1
11	101886101	Screw, Square Head, 1/4-20 x 1	1
12	1014007	Washer, Type B, 1/4	1
13	8233	Nut, Nylon Lock, 1/4-20	1
	101833601	Unitized Transaxle (includes items 14 - 88)	1
14	101890201	Shaft, Shifter	1
15	101927301	Ring, Snap	1
16	101892901	Washer, Flat	1
17	101927201	Seal, Oil	1
18	101890101	Lever, Shifter	1
19	1012752	Pin, Roll	1
20	101928601	Pin, Cotter	1
21	1016513	Washer, Flat	1
22	101927101	Seal, Oil	1
23	101893801	Washer	1
24	101891301	Arm, Pivot	1
25	101890601	Gear Case (passenger side)	1
26	101890501	Gear Case (driver side)	1
27	101926901	Bolt, Flanged, M8 x 1.25 x 40 mm	15
28	1012896	Pin, Dowel	2
29	1013759	Plug, Drain (includes item 30)	2
30	1016432	Gasket	1
31	1012711	Breather	1
32	101928701	Gasket, Liquid, 8.8 oz. (250 grams)	A/R

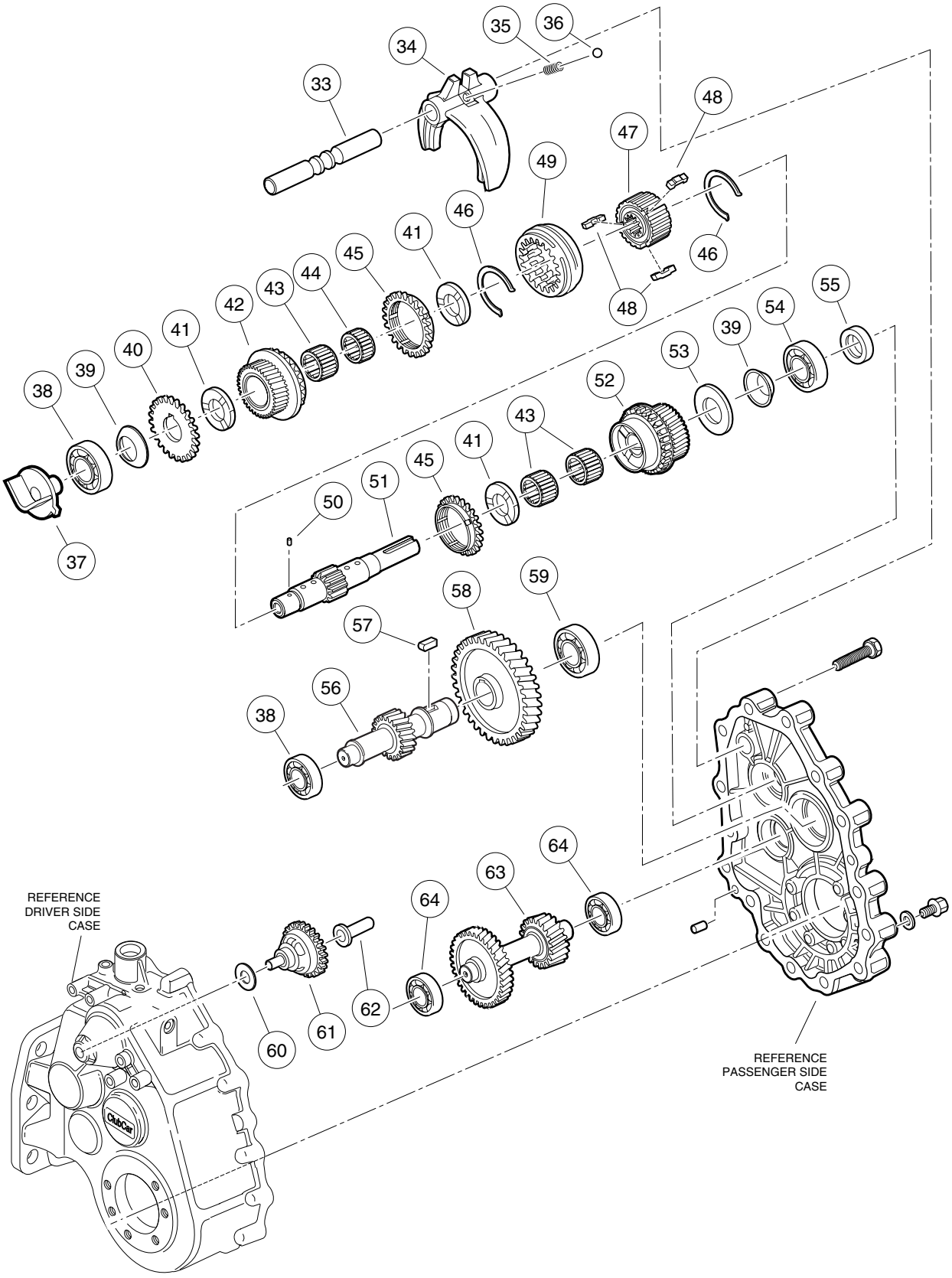
35
36
34
33
48
47
49
46
41
46
48
45
44
43
42
41
40
39
38
37
55
54
39
53
52
43
41
45
51
50
59
58
57
56
38
64
63
64
62
61
60
REFERENCE
DRIVER SIDE
CASE
REFERENCE
PASSENGER SIDE
CASE

UNITIZED TRANSAXLE, GASOLINE VEHICLE – F&R TRANSMISSION AND GEAR REDUCTION

ITEM	PART NO.	DESCRIPTION	QTY
		1 2 3 4	
33	101892001	Rod, Shift	1
34	101890001	Fork, Shift	1
35	1012748	Spring	1
36	1012747	Ball, Steel	1
37	101889401	Guide	1
38	AM10080	Bearing, Ball	2
39	1016338	Washer, Spring	2
40	101892401	Gear, Spur	1
41	101892201	Plate, Thrust	3
42	101980901	Gear Assembly, Input, 28 Tooth (16°)	1
43	101927601	Bearing, Needle	3
44	101927501	Bearing, Needle	1
45	101981001	Ring, Synchronizer (16°)	2
46	1012741	Spring, Synchronizer	2
47	101928001	Hub, Synchronizer Clutch	1
48	1012740	Insert, Synchronizer	3
49	101927901	Sleeve, Synchronizer	1
50	101927701	Pin, Dowel	1
51	101889901	Shaft, Input	1
52	101980801	Gear Assembly, Input, 25 Tooth (16°)	1
53	1016337	Washer, Thrust	1
54	AM10081	Bearing, Ball	1
55	1012714	Seal, Oil, Input Shaft	1
56	101892601	Gear, 17 Tooth	1
57	101893201	Key	1
58	101892501	Gear, 61 Tooth	1
59	101928101	Bearing, Ball	1
60	101893901	Washer	1
61	101892301	Governor Assembly	1
62	101891601	Sleeve	1
63	101891901	Gear, Cluster Idler	1
64	7335	Bearing, Ball	2

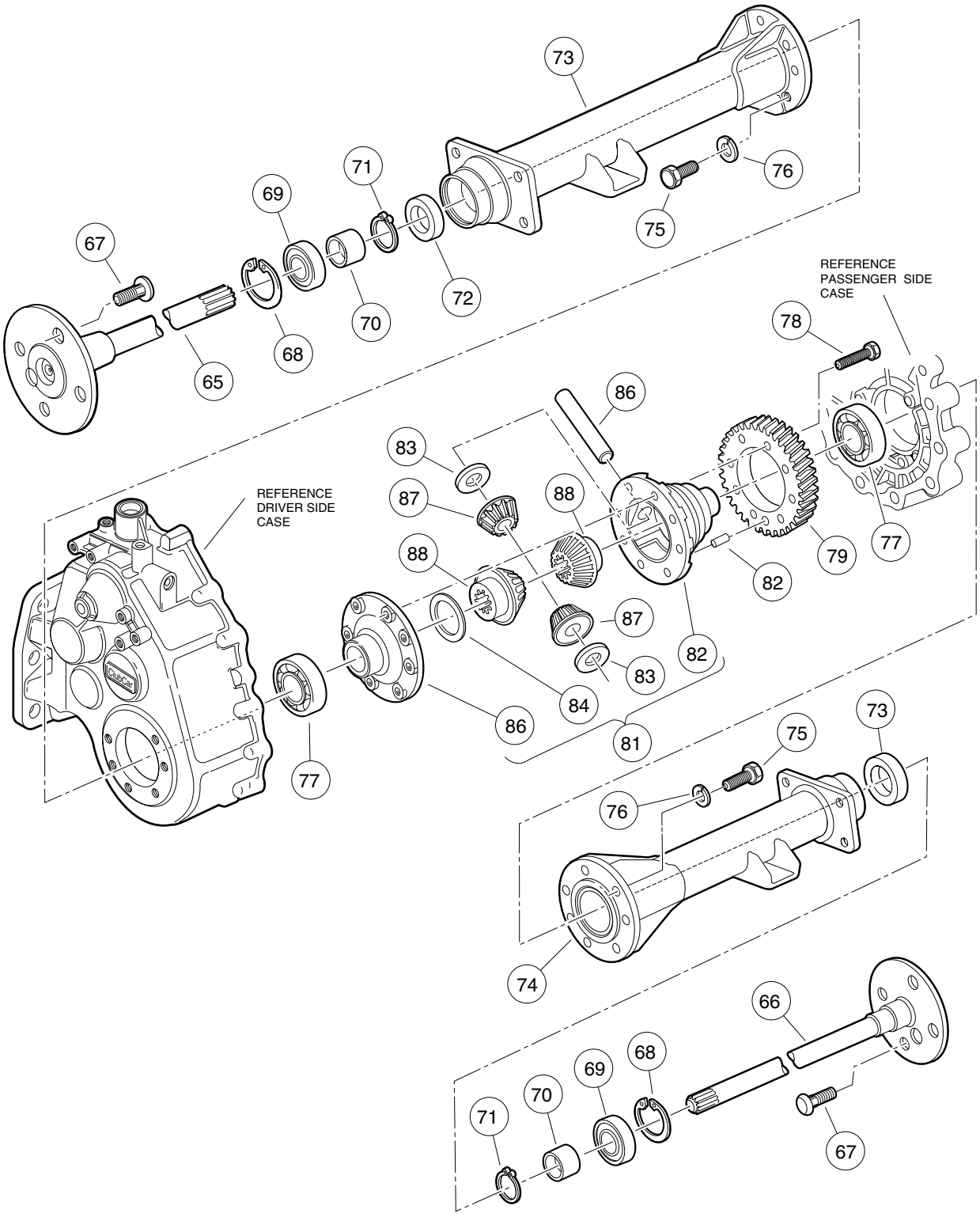
73
71
69
76
75
67
72
70
68
65
REFERENCE
PASSENGER SIDE
CASE
78
86
83
87
88
REFERENCE
DRIVER SIDE
CASE
88
79
77
82
87
82
83
84
86
81
77
73
75
76
74
66
68
69
70
71
67

ITEM	PART NO.	DESCRIPTION	QTY
		1 2 3 4	
65	101891501	Axle Assembly, Driver-Side (Includes items 67 - 71)	1
66	101891401	Axle Assembly, Passenger-Side (includes items 67 - 71)	1
67	1013787	Stud, Lug	4
68	1013792	Ring, Retaining	1
69	1011291	Bearing, Outer Axle Tube	1
70	1014207	Collar, 25 mm I. D.	1
71	1016672	Ring, Retaining	1
72	1013794	Seal, Oil	2
73	101891001	Assembly, Axle Tube, Driver-Side	1
74	101890901	Assembly, Axle Tube, Passenger-Side	1
75	1013790	Bolt, M10 x 1.5 x 30 mm	14
76	1013791	Washer, Lock, M10	14
77	7330	Bearing, Inner Axle Tube	2
78	101928301	Bolt, M8 x 1.25 x 37 mm	8
79	101892701	Gear, Output	1
80	1014193	Pin, Dowel	1
81	101910501	Kit, Differential Gear Case (includes items 82 - 85)	1
82	1013768	Case, Gear Carrier	1
83	1013774	Plate, Thrust (idler gear)	2
84	1013773	Plate, Thrust (differential gear)	1
85	1013769	Cover, Gear Case	1
86	1013772	Pin, Differential	1
87	1013770	Gear, Differential Idler	2
88	1013771	Gear, Differential	2

11
G

ELECTRICAL SYSTEM – ELECTRIC VEHICLE

12

E

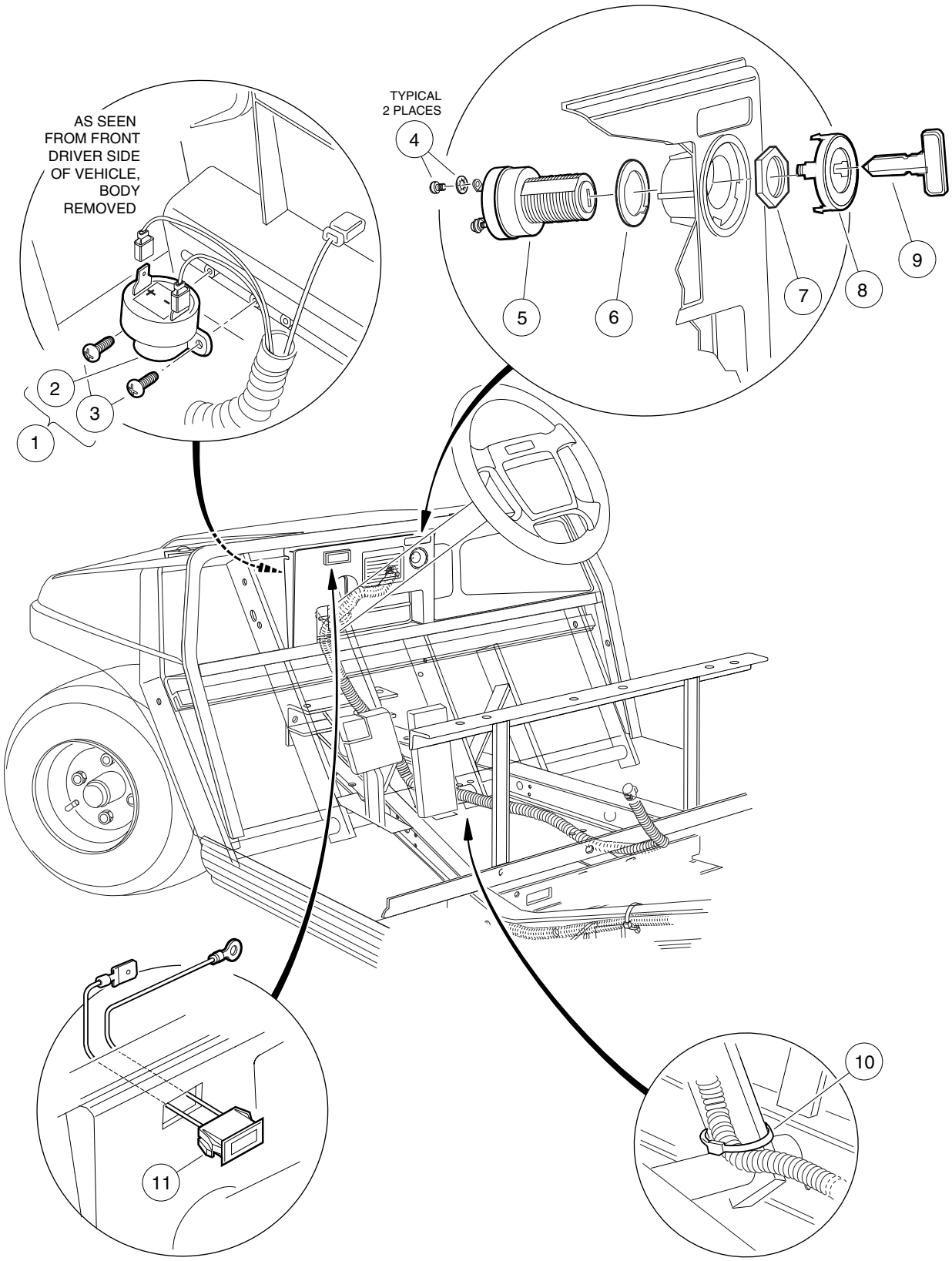
AS SEEN FROM FRONT DRIVER SIDE OF VEHICLE, BODY REMOVED
TYPICAL 2 PLACES
1
2
3
4
5
6
7
8
9
10
11

ELECTRICAL COMPONENTS, FRONT BODY – VILLAGER 4 VEHICLE

ITEM	PART NO.	DESCRIPTION	QTY
		1 2 3 4	
1	1016859	Kit, Reverse Buzzer (includes items 2 and 3)	1
2	1016851	Buzzer, Reverse	1
3	1016849	Screw, Pan-Head Hi-Lo, #4-24 x 5/16	2
4	101830601	Assembly, Screw and Washer	2
5	101826201	Switch, Key	1
6	101851101	Washer, Key Switch	1
7	101830701	Nut, Key Switch	1
8	101834502	Cap, Key Switch	1
9	1012505	Key (pair)	1
10	8990	Tie, Wire	2
11	101935501	Light, Battery Warning (amber)	1

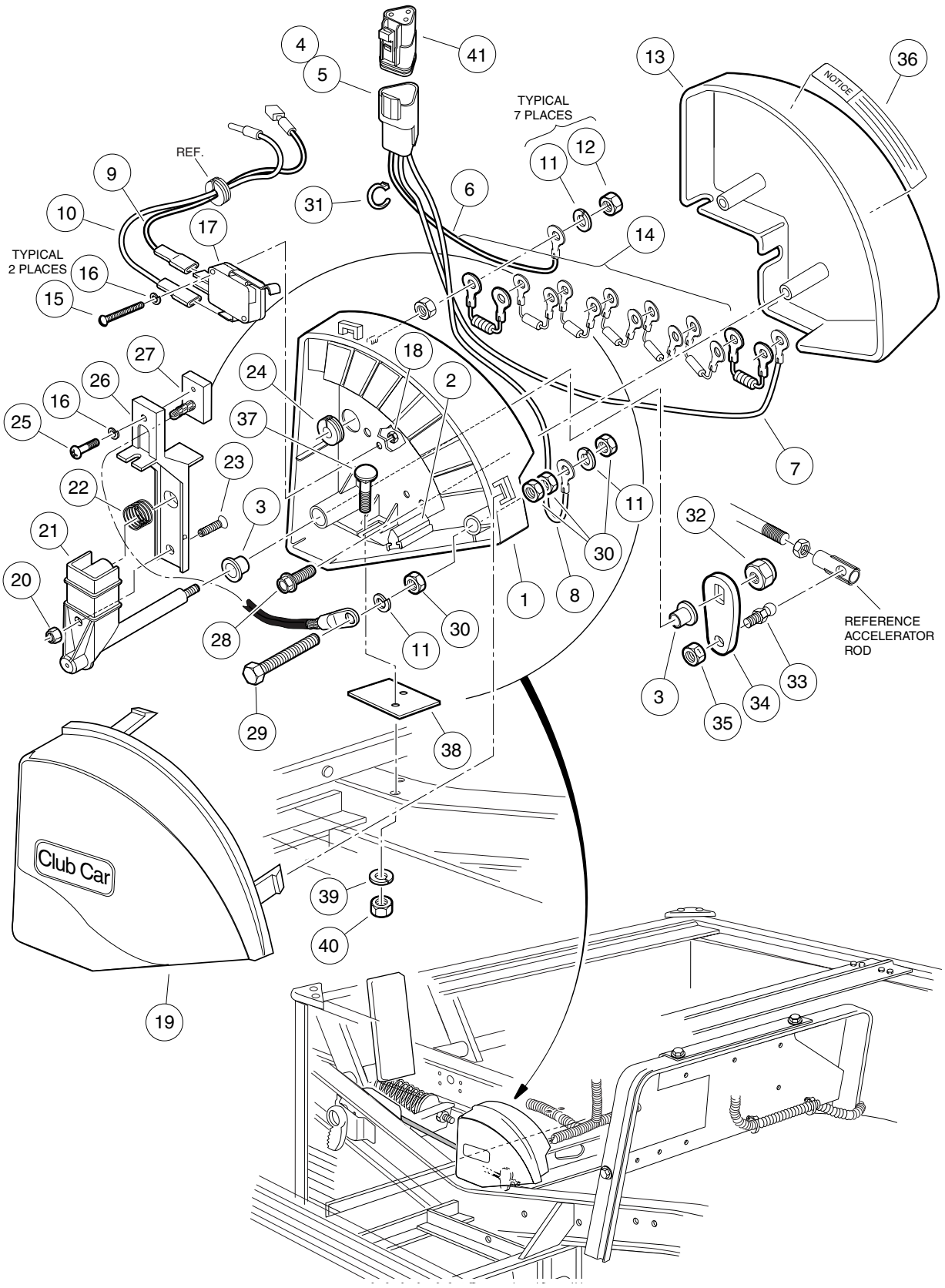
TYPICAL
7 PLACES
REF.
TYPICAL
2 PLACES
NOTICE
REFERENCE
ACCELERATOR
ROD
Club Car

MULTI-STEP POTENTIOMETER – VILLAGER 4 POWERDRIVE SYSTEM 48 VEHICLE

ITEM	PART NO.	DESCRIPTION	QTY
		1 2 3 4	
		NOTE: See page 12-9 for the MCOR Conversion Kit.	
		This page pertains to vehicles with serial numbers lower than 0112-001470.	
	101932001	Assembly, Wiper Switch (includes items 1 - 36)	1
1	1014999	Assembly, Wiper Switch Case, 6-Speed (includes items 2 and 3)	1
2	1014414	Bumper, Wiper Switch	1
3	1012903	Bearing, Bronze	2
4	101932801	Assembly, 3-Wire and Receptacle (includes items 5 - 8)	1
5	101942301	Kit, 3-Pin Receptacle	1
6	N/A	Wire Assembly, #18 White/Black	1
7	N/A	Wire Assembly, #18 Purple	1
8	N/A	Wire Assembly, #18 Yellow	1
9	N/A	Wire Assembly, #18 Green/White	1
10	N/A	Wire Assembly, #18 Blue	1
11	451	Washer, Lock, 1/4	9
12	1028	Nut, Hex, 1/4-20	7
13	101946901	Protector, Wiper Switch Resistor	1
14	101971101	Kit, Resistor Assembly	1
15	8056	Screw, Round-Head Machine, #4-40 x 3/4	2
16	8058	Washer, Lock, #4	3
17	1014807	Switch, Limit	1
18	8057	Nut, Hex, #4-40	2
19	1013886	Cover, Wiper Switch	1
20	1013061	Nut, Nylon Lock, #10-32	1
21	1014017	Carrier, Wiper Switch Arm	1
22	1013998	Spring, Wiper Switch Brush	1
23	1014000	Stud, Wiper Switch Adjusting	1
24	1014010	Grommet, Split	1
25	1014019	Screw, Self-Tapping, #4-40 x 3/8	1
26	1013887	Arm, Speed Switch	1
27	1013860	Assembly, Switch Brush	1
28	1013461	Screw, Hex-Head Hi-Lo, #10-16 x 1/2	2
29	1014189	Screw, Hex-Head Cap, 1/4-20 x 2	1
30	1014253	Nut, Brass Hex Jam, 1/4-20	4
31	8990	Tie, Wire	1
32	7473	Nut, Nylon Lock, 5/16-18	1
33	1012353	Stud, Short Ball, 1/4-28	1
34	1014003	Crank, Bell	1
35	8449	Nut, Dimpled Lock, 1/4-28	1
36	101610901	Decal, Wiper Switch Warning	1
37	1014109	Bolt, Carriage, #10-24 x 1	2
38	101949201	Shim, Wiper Switch	1
39	1016175	Washer, Lock, #10	2
40	1017	Nut, Hex, #10-24	2
41	101920101	Kit, 3-Pin Plug Assembly	1

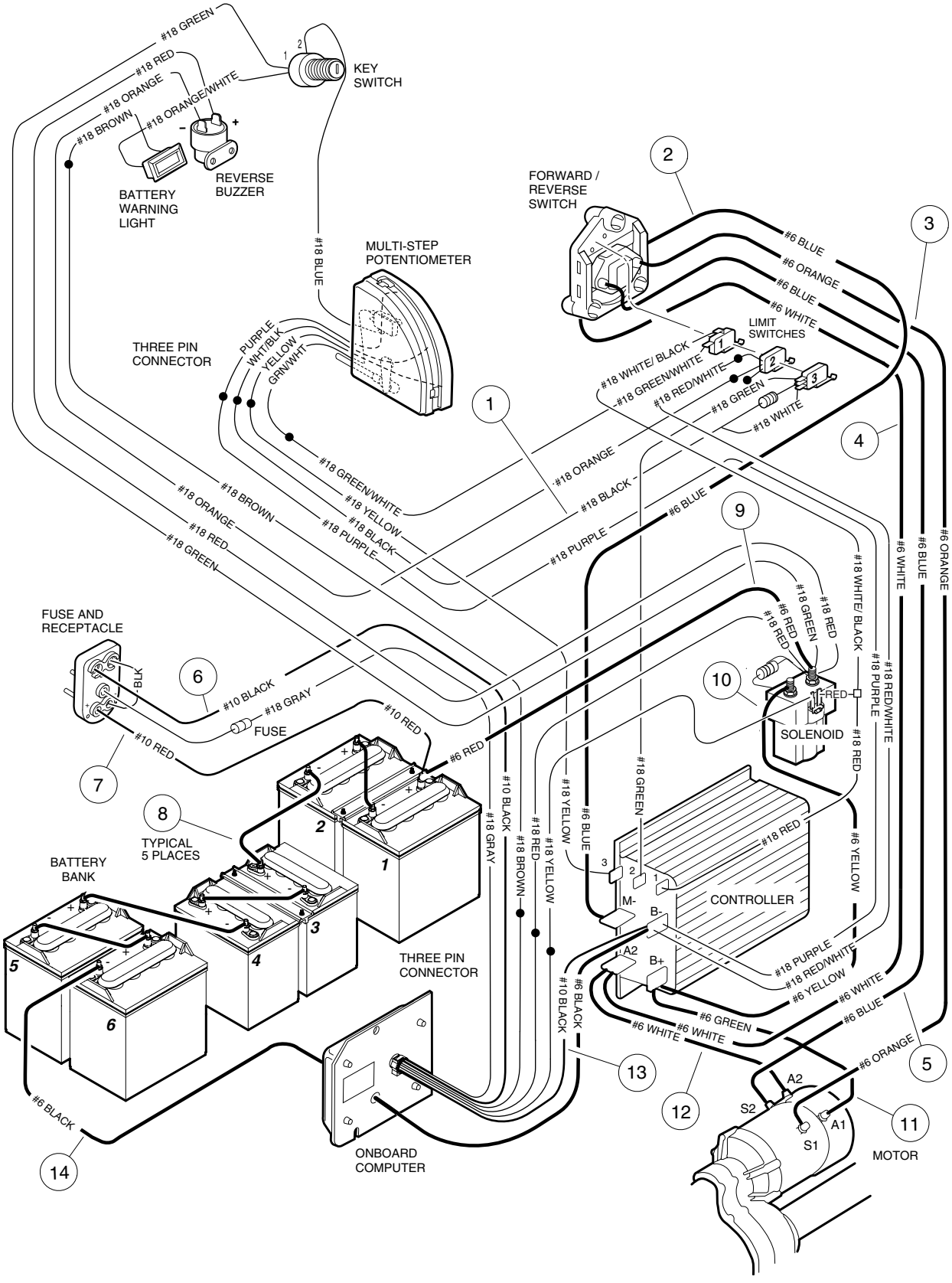
#18 GREEN
#18 RED
#18 ORANGE
#18 ORANGE/WHITE
#18 BROWN
KEY SWITCH
BATTERY WARNING LIGHT
REVERSE BUZZER
#18 BLUE
MULTI-STEP POTENTIOMETER
THREE PIN CONNECTOR
PURPLE
WHT/BLK
YELLOW
GRN/WHT
FORWARD / REVERSE SWITCH
#6 BLUE
#6 ORANGE
#6 BLUE
#6 WHITE
LIMIT SWITCHES
#18 WHITE/ BLACK
#18 GREEN/WHITE
#18 RED/WHITE
#18 GREEN
#18 WHITE
#18 GREEN/WHITE
#18 YELLOW
#18 BLACK
#18 PURPLE
#18 ORANGE
#18 BLACK
#6 BLUE
#18 BROWN
#18 ORANGE
#18 RED
#18 GREEN
#18 WHITE/ BLACK
#18 PURPLE
#18 RED/WHITE
#6 WHITE
#6 BLUE
#6 ORANGE
FUSE AND RECEPTACLE
BLK
#10 BLACK
#18 GRAY
FUSE
#10 RED
#6 RED
#18 RED
#18 GREEN
#6 RED
#18 RED
SOLENOID
RED
#10 RED
#10 BLACK
#18 GRAY
#18 BROWN
#18 RED
#18 YELLOW
#6 BLUE
#18 YELLOW
#18 GREEN
#18 RED
#6 YELLOW
TYPICAL 5 PLACES
BATTERY BANK
CONTROLLER
M-
B-
A2
B+
#18 PURPLE
#18 RED/WHITE
#6 YELLOW
#6 WHITE
#6 BLUE
#6 GREEN
#6 WHITE
#6 WHITE
#6 ORANGE
THREE PIN CONNECTOR
#10 BLACK
#6 BLACK
A2
S2
A1
S1
MOTOR
ONBOARD COMPUTER
#6 BLACK
1
2
3
4
5
6
7
8
9
10
11
12
13
14

WIRING – VILLAGER 4 POWERDRIVE SYSTEM 48 VEHICLE WITH MULTI-STEP POTENTIOMETER

ITEM	PART NO.	DESCRIPTION	QTY
		1 2 3 4	
		For vehicles with serial numbers lower than 0112-001470.	
	101911004	Wire Harness (includes items 1 - 5)	1
1	101883002	Wire Assembly, #18 Black (includes resistor and #18 white wire)	1
2	101901401	Wire Assembly, #6 Blue	1
3	101901201	Wire Assembly, #6 Orange	1
4	101911101	Wire Assembly, #6 White	1
5	101901301	Wire Assembly, #6 Blue	1
6	N/A	Wire Assembly, #10 Black (part of onboard computer assembly)	1
7	N/A	Wire Assembly, #10 Red (part of fuse and receptacle assembly)	1
8	101795701	Wire Assembly, #6 Black	5
9	101902801	Wire Assembly, #6 Red	1
10	101903001	Wire Assembly, #6 Yellow	1
11	101902901	Wire Assembly, #6 Green	1
12	1014856	Wire Assembly, #6 White	1
13	N/A	Wire Assembly, #10 Black (part of onboard computer assembly)	1
14	N/A	Wire Assembly, #6 Black (part of onboard computer assembly)	1

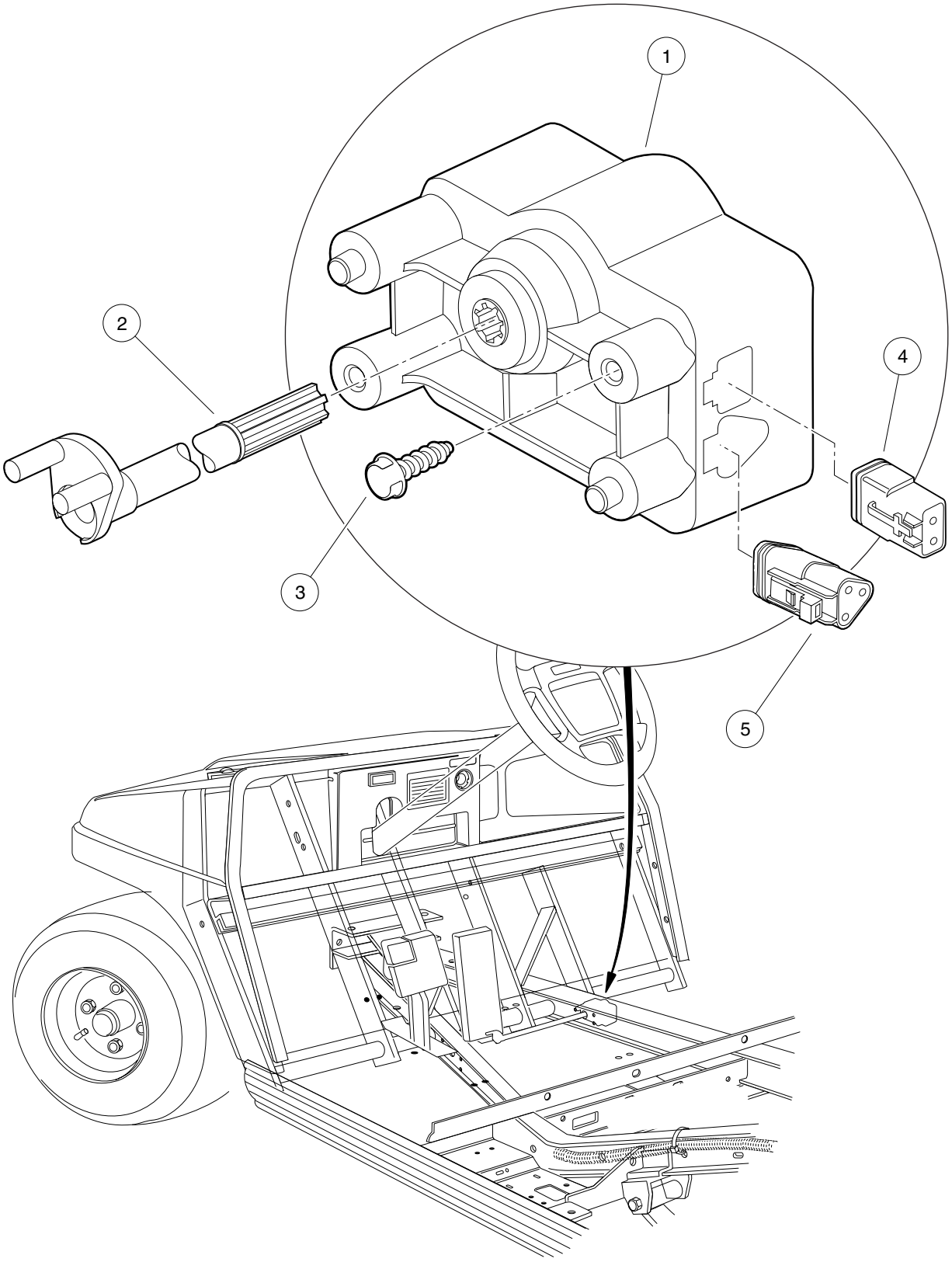
1
2
3
4
5

MOTOR CONTROLLER OUTPUT REGULATOR (MCOR) – POWERDRIVE SYSTEM 48 AND IQ SYSTEM VEHICLES

ITEM	PART NO.	DESCRIPTION	QTY
		1 2 3 4 For vehicles with serial numbers 0112-001470 and greater.	
1	102101101	Regulator, Motor Controller Output (MCOR)	1
2	102101001	Bar, Drive	1
3	1015752	Screw, Hex-Head, Hi-Lo, #12-16 x 5/8	2
4	101936801	Kit, 2-Pin Plug Assembly	1
5	101920101	Kit, 3-Pin Plug Assembly	1
6	102248301	Kit, MCOR Conversion (not shown)*	1
		*For vehicles with serial numbers lower than 0112-001470.	

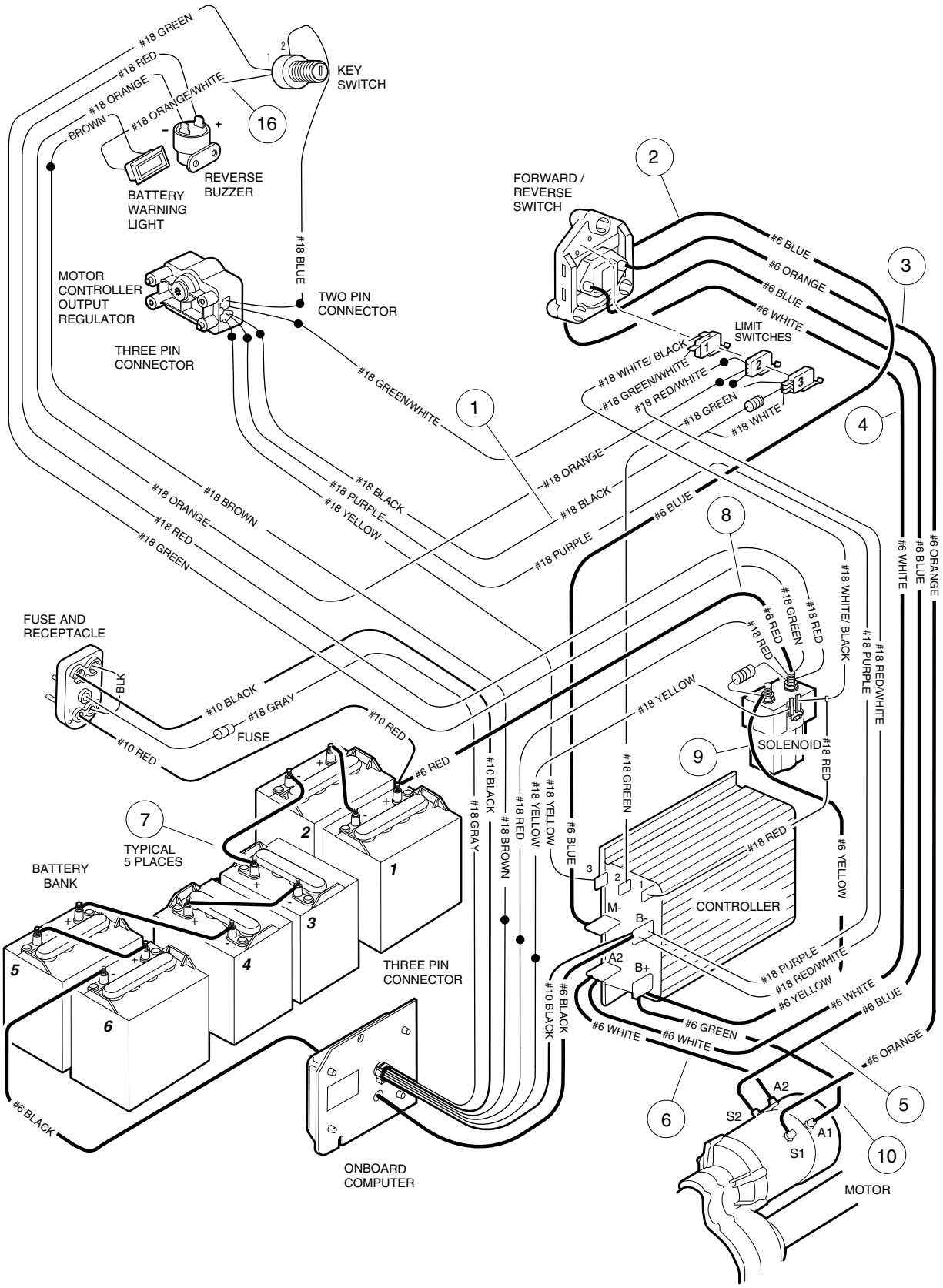
#18 GREEN
#18 RED
#18 ORANGE
#18 ORANGE/WHITE
BROWN
KEY SWITCH
16
REVERSE BUZZER
BATTERY WARNING LIGHT
#18 BLUE
MOTOR CONTROLLER OUTPUT REGULATOR
TWO PIN CONNECTOR
THREE PIN CONNECTOR
#18 GREEN/WHITE
FORWARD / REVERSE SWITCH
2
#6 BLUE
#6 ORANGE
#6 BLUE
#6 WHITE
3
LIMIT SWITCHES
#18 WHITE/ BLACK
#18 GREEN/WHITE
#18 RED/WHITE
#18 GREEN
#18 WHITE
1
4
#18 ORANGE
#18 BLACK
#18 PURPLE
#6 BLUE
#18 BROWN
#18 ORANGE
#18 RED
#18 GREEN
#18 BLACK
#18 PURPLE
#18 YELLOW
8
#6 ORANGE
#6 BLUE
#6 WHITE
#18 WHITE/ BLACK
#18 PURPLE
#18 RED/WHITE
#6 RED
#18 GREEN
#18 RED
#18 RED
FUSE AND RECEPTACLE
BLK
#10 BLACK
#18 GRAY
FUSE
#10 RED
#10 RED
#18 YELLOW
SOLENOID
9
#18 RED
#6 RED
#10 BLACK
#18 GRAY
#18 YELLOW
#18 RED
#18 BROWN
#18 YELLOW
#6 BLUE
#18 GREEN
#18 RED
#6 YELLOW
7
TYPICAL 5 PLACES
BATTERY BANK
1
2
3
4
5
6
M-
B-
A2
B+
CONTROLLER
#18 PURPLE
#18 RED/WHITE
#6 YELLOW
#6 WHITE
#6 BLUE
#6 GREEN
#6 WHITE
#6 WHITE
#6 ORANGE
#10 BLACK
THREE PIN CONNECTOR
#6 BLACK
ONBOARD COMPUTER
6
5
A2
S2
A1
S1
10
MOTOR

ITEM	PART NO.	DESCRIPTION	QTY
		1 2 3 4 For Villager 4 vehicles with serial numbers 0112-001470 and greater.	
	102162102	Wire Harness (includes items 1 - 6)	1
1	101883002	Wire Assembly, #18 Black (includes resistor and #18 white wire)	1
2	101901401	Wire Assembly, #6 Blue	1
3	101901201	Wire Assembly, #6 Orange	1
4	101901501	Wire Assembly, #6 White	1
5	101901301	Wire Assembly, #6 Blue	1
6	101911101	Wire Assembly, #6 White	1
7	101795701	Wire Assembly, #6 Black	5
8	101902801	Wire Assembly, #6 Red	1
9	101903001	Wire Assembly, #6 Yellow	1
10	101902901	Wire Assembly, #6 Green	1

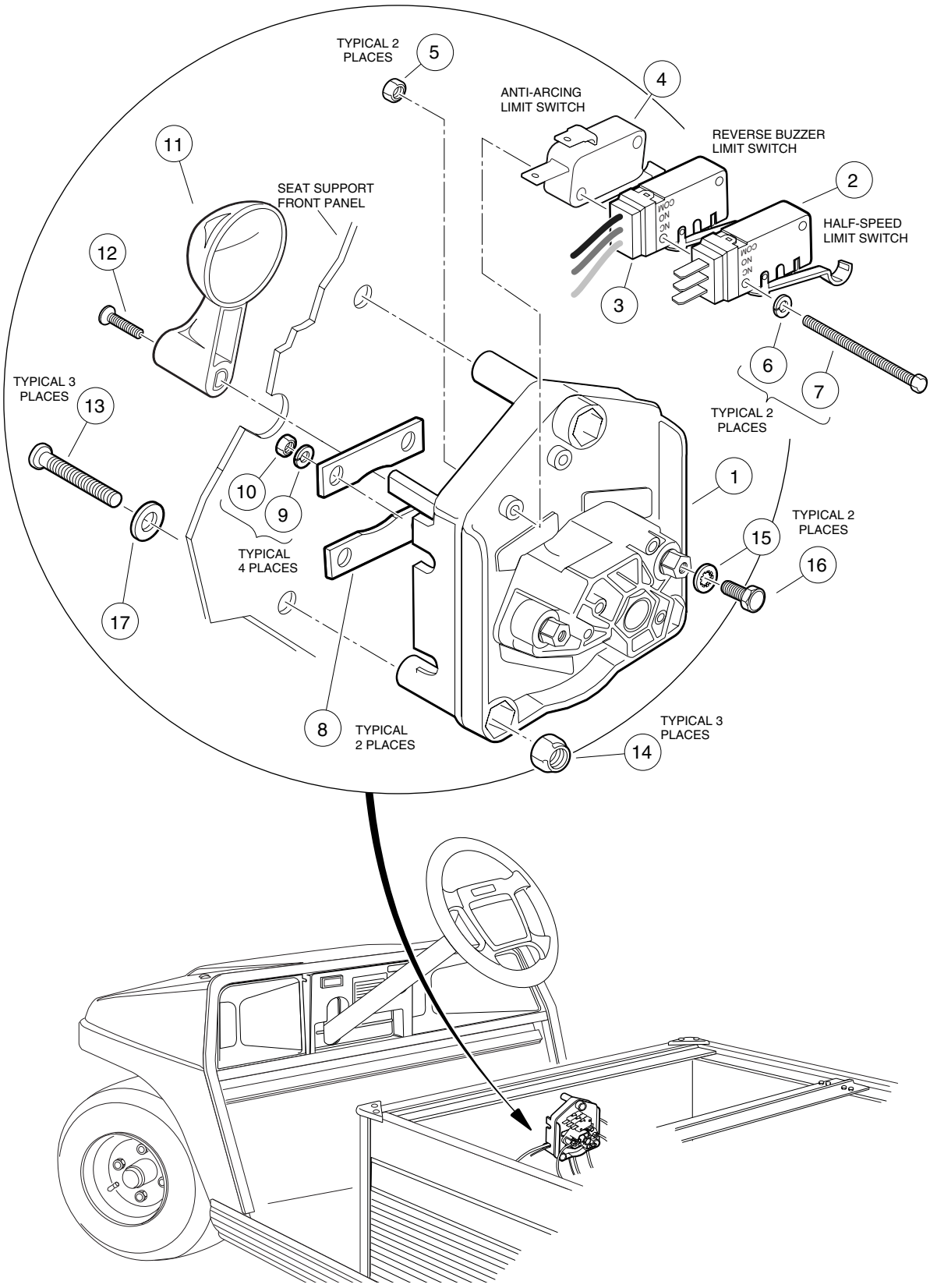
TYPICAL 2 PLACES
5
4
ANTI-ARCING LIMIT SWITCH
REVERSE BUZZER LIMIT SWITCH
2
HALF-SPEED LIMIT SWITCH
11
SEAT SUPPORT FRONT PANEL
12
3
6
7
TYPICAL 2 PLACES
TYPICAL 3 PLACES
13
1
10
9
TYPICAL 4 PLACES
TYPICAL 2 PLACES
15
16
17
8
TYPICAL 2 PLACES
TYPICAL 3 PLACES
14

FORWARD/REVERSE SWITCH – POWERDRIVE SYSTEM 48 VEHICLE

ITEM	PART NO.	DESCRIPTION	QTY
		1 2 3 4	
1	101753005	Assembly, Forward/Reverse Switch (includes items 2 - 10)	1
2	102250201	Switch, Limit, Sealed	1
3	101979101	Switch, Limit, Sealed	1
4	1014808	Switch, Limit	1
5	8057	Nut, Hex, #4-40	2
6	8058	Washer, Lock, #4	2
7	1014871	Screw, Hex Washer-Head, #4-40 x 2	2
8	1017799	Bar, Bus	2
9	451	Washer, Lock, 1/4	4
10	1028	Nut, Hex, 1/4-20	4
11	1012987	Handle, Forward/Reverse Switch	1
12	1015064	Screw, Oval Countersunk Machine, #8-32 x 5/8	1
13	1016845	Screw, Phillips Truss-Head, 1/4-20 x 2-1/8	3
14	8233	Nut, Nylon Lock, 1/4-20	3
15	8049	Washer, Internal Tooth Lock, #10	2
16	8450	Screw, Hex-Head Machine, #10-24 x 1/2	2
17	1014528	Washer, Plastic, 1/4 (Villager vehicles only)	3

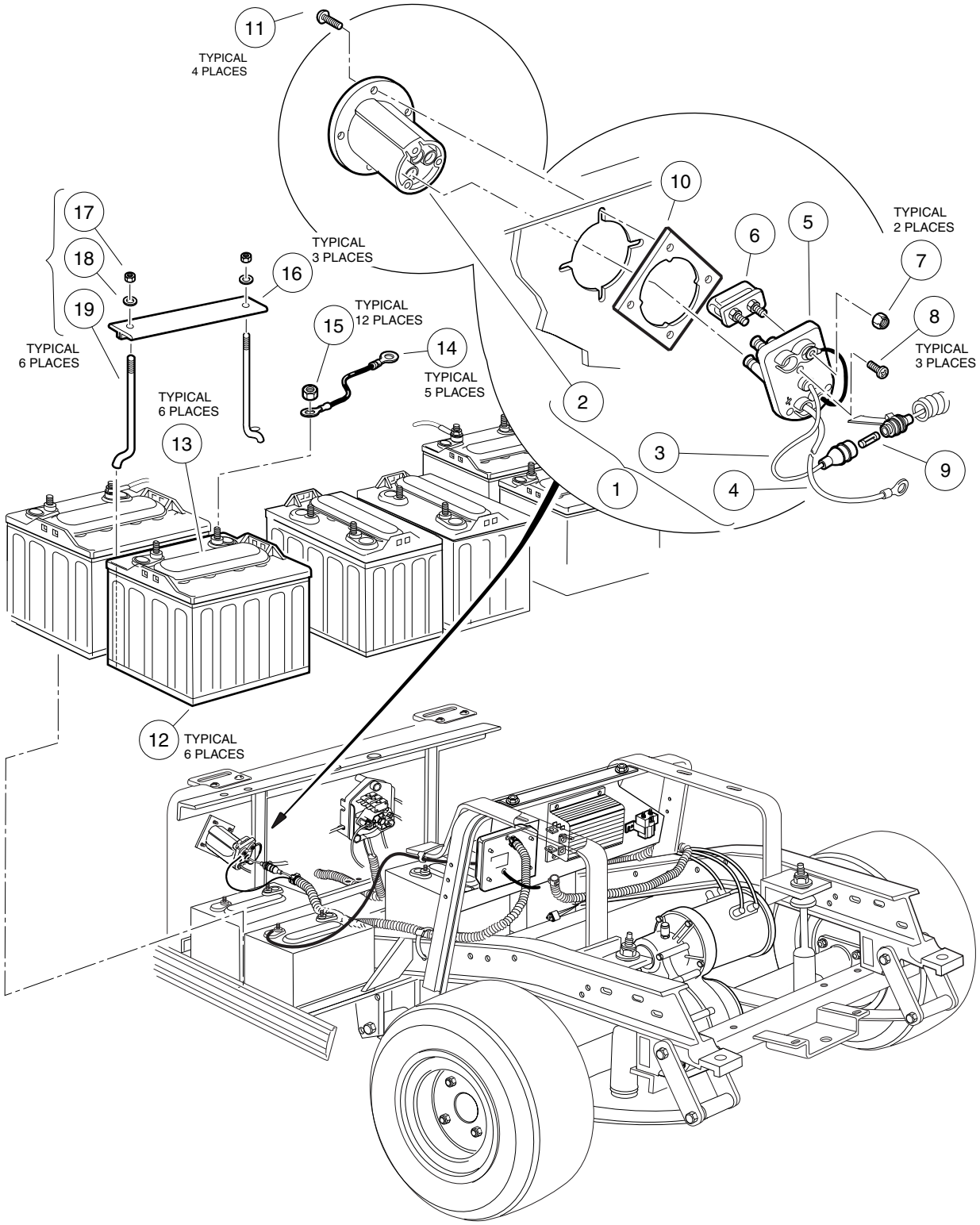
11
TYPICAL
4 PLACES
10
TYPICAL
2 PLACES
6
5
7
8
TYPICAL
3 PLACES
17
18
19
TYPICAL
6 PLACES
16
TYPICAL
3 PLACES
15
TYPICAL
12 PLACES
14
TYPICAL
5 PLACES
TYPICAL
6 PLACES
13
2
3
9
1
4
12
TYPICAL
6 PLACES

BATTERIES, CHARGER RECEPTACLE – VILLAGER 4 POWERDRIVE SYSTEM 48 VEHICLE

ITEM	PART NO.	DESCRIPTION	QTY
		1 2 3 4	
1	101802101	Kit, Fuse And Receptacle (includes items 2 - 9)	1
2	101796501	Bezel, Receptacle	1
3	N/A	Wire Assembly, Sense Lead, Gray	1
4	N/A	Wire Assembly, #10 Red	1
5	N/A	Wire Assembly, #10 Black	1
6	101796801	Assembly, Fuse, 48-Volt (includes item 7)	1
7	1013061	Nut, Nylon Lock, #10	2
8	1017705	Screw, Phillips Pan-Head, #8 Type AB	3
9	101894901	Fuse, 3/8-Amp	1
10	101801001	Plate, Receptacle Backing	1
11	101832001	Screw, Phillips Pan-Head, #7-18 x 3/4	4
12	101797701	Battery, 8-Volt PowerDrive (includes item 13)	6
12	101797702	Battery, 8-Volt PowerDrive, Dry (includes item 13)	6
13	101797801	Cap, Battery, 4 Port Gang	1
14	101795701	Wire Assembly, #6 Black	5
15	1014304	Nut, Hex, Stainless Steel, 5/16-18	12
16	101090801	Hold-Down, Battery	3
17	1015072	Nut, Nylon Lock, Stainless Steel, 5/16-18	6
18	1011578	Washer, Flat, Type B Wide, 5/16	6
19	1013683	J-Bolt	6

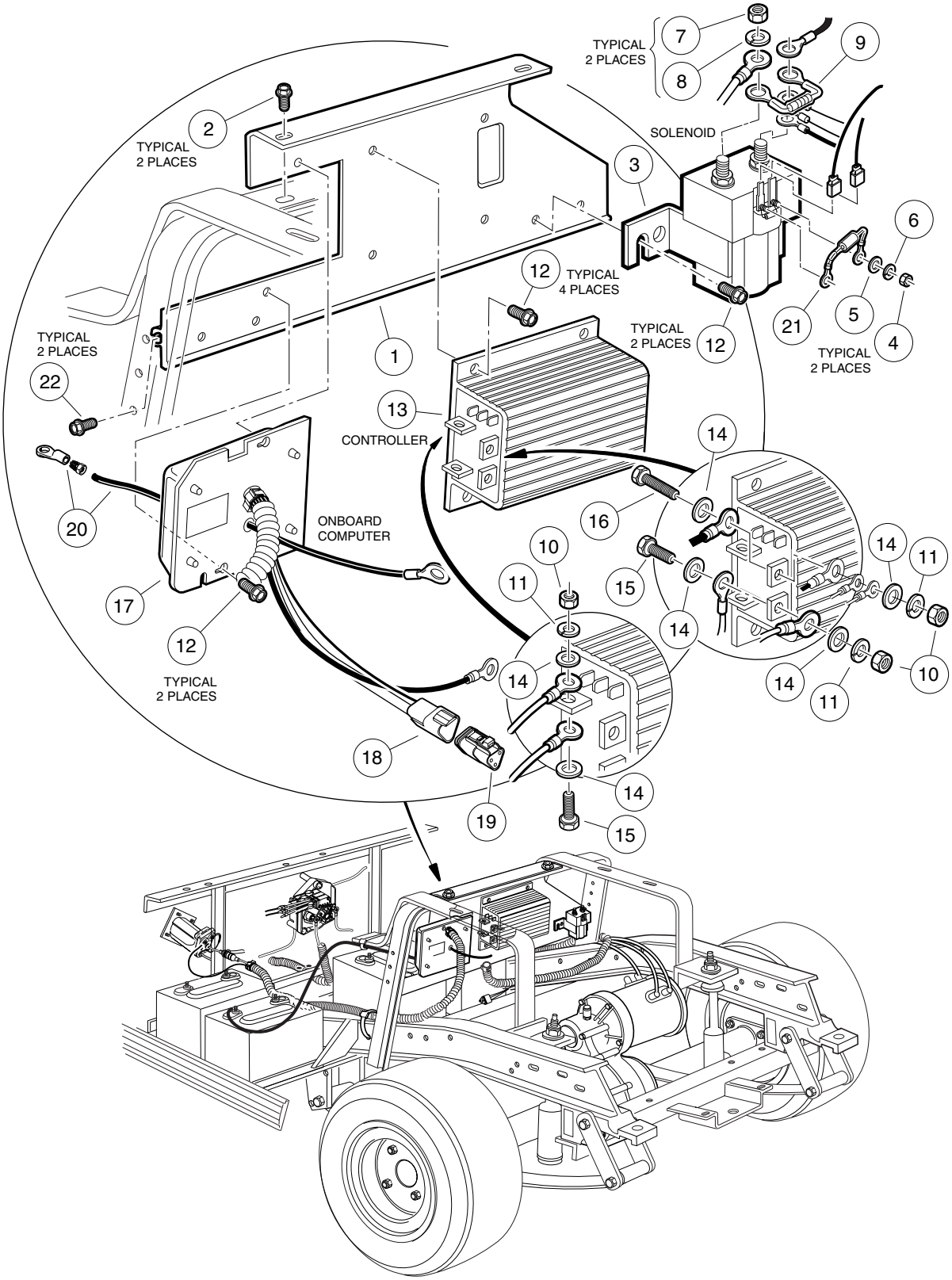
TYPICAL
2 PLACES
7
8
9
SOLENOID
2
TYPICAL
2 PLACES
3
6
12
TYPICAL
4 PLACES
TYPICAL
2 PLACES
12
21
5
4
TYPICAL
2 PLACES
TYPICAL
2 PLACES
1
22
13
CONTROLLER
14
16
20
ONBOARD
COMPUTER
10
11
15
14
11
17
14
12
TYPICAL
2 PLACES
14
14
11
10
18
14
19
15

COMPUTER, CONTROLLER, AND SOLENOID – VILLAGER 4 POWERDRIVE SYSTEM 48 VEHICLE

ITEM	PART NO.	DESCRIPTION	QTY
		1 2 3 4	
1	101965201	Plate, Component Mounting	1
2	1014288	Screw, Thread-Forming, 5/16-18 x 3/4	2
3	101908701	Solenoid, 48-Volt (with diode) (includes items 4 - 8)	1
4	1011558	Nut, Hex, #6-32	2
5	N/A	Washer, Flat	2
6	N/A	Washer, Lock	2
7	1012528	Nut, Hex, M8	2
8	7174	Washer, Lock, 5/16	2
9	1014947	Assembly, Resistor	1
10	1242	Nut, Hex, 5/16-18	3
11	7174	Washer, Lock, 5/16	3
12	1012285	Screw, Hex, Type TT, 1/4-20 x 5/8	8
13	101840203	Controller, 48-Volt (300-Amp)	1
14	1241	Washer, Flat, 5/16	6
15	7173	Screw, Hex-Head Cap, 5/16-18 x 3/4	2
16	1218	Screw, Hex-Head Cap, 5/16-18 x 1-1/4	1
17	101909901	Computer, Onboard (includes item 18)	1
18	101942301	Kit, 3-Pin Receptacle	1
19	101920101	Kit, 3-Pin Plug Assembly	1
20	101827801	Kit, Wire and Terminal, #6 Black	1
21	1014948	Assembly, Diode (Service Part replacement for existing diode that comes standard with solenoid)	1
22	101910401	Screw, Thread-Forming, 5/16-18 x 1-1/4	2

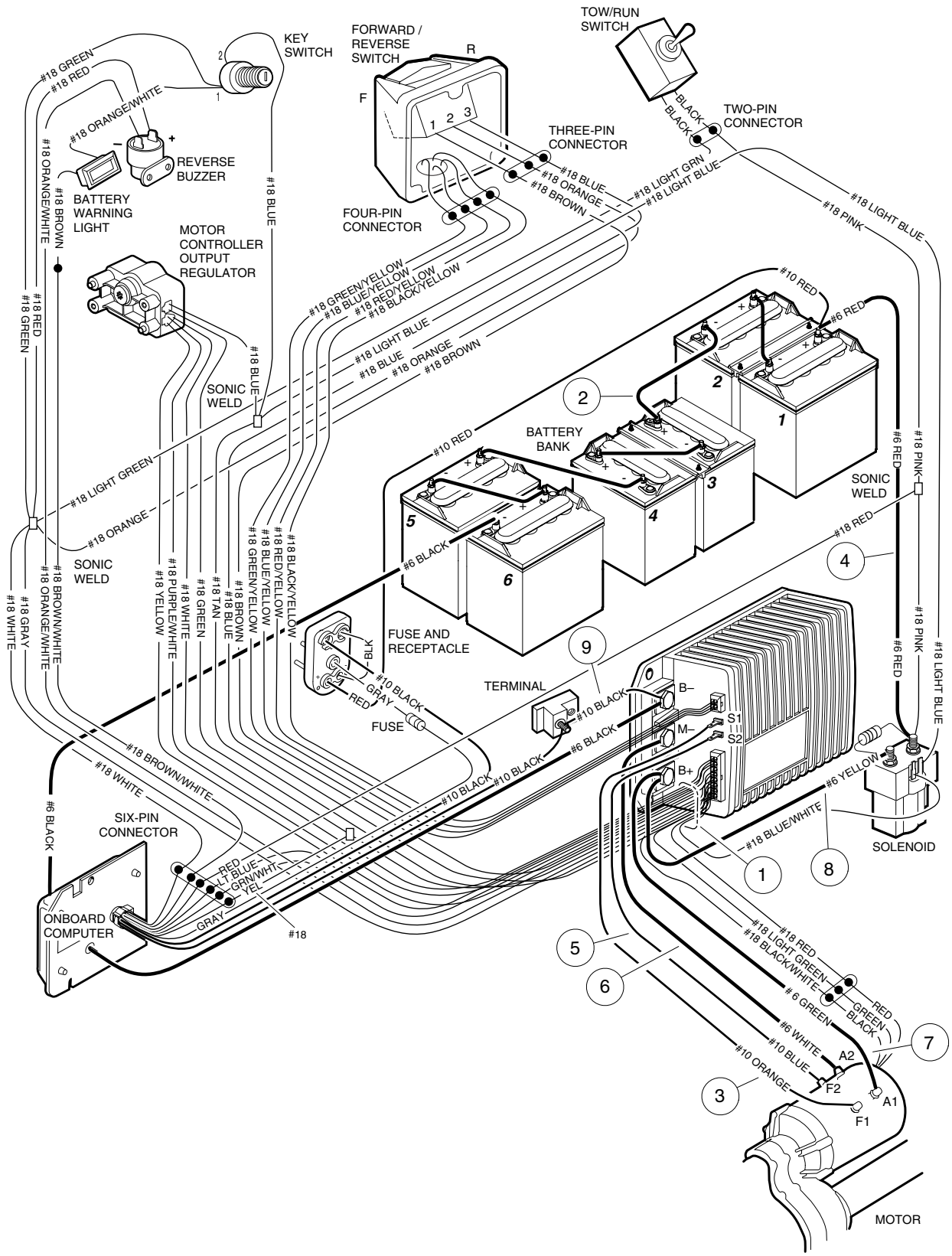
KEY SWITCH
FORWARD / REVERSE SWITCH
TOW/RUN SWITCH
THREE-PIN CONNECTOR
TWO-PIN CONNECTOR
FOUR-PIN CONNECTOR
REVERSE BUZZER
BATTERY WARNING LIGHT
MOTOR CONTROLLER OUTPUT REGULATOR
SONIC WELD
BATTERY BANK
FUSE AND RECEPTACLE
FUSE
TERMINAL
SOLENOID
SIX-PIN CONNECTOR
ONBOARD COMPUTER
MOTOR
#18 GREEN
#18 RED
#18 ORANGE/WHITE
#18 BROWN
#18 BLUE
#18 LIGHT BLUE
#18 PINK
#18 LIGHT GRN
#18 ORANGE
#18 BROWN
#18 GREEN/YELLOW
#18 BLUE/YELLOW
#18 RED/YELLOW
#18 BLACK/YELLOW
#18 LIGHT GREEN
#18 WHITE
#18 GRAY
#18 BROWN/WHITE
#18 PURPLE/WHITE
#18 YELLOW
#18 TAN
#10 RED
#6 RED
#6 BLACK
#10 BLACK
#10 GRAY
#6 YELLOW
#18 BLUE/WHITE
#18 RED
#18 LIGHT GREEN
#18 BLACK/WHITE
#6 GREEN
#6 WHITE
#10 BLUE
#10 ORANGE
BLACK
GRAY
RED
LT BLUE
GRN/WHT
YEL
GREEN
B–
M–
B+
S1
S2
A2
F2
A1
F1

WIRING – VILLAGER 4 IQ SYSTEM VEHICLE

ITEM	PART NO.	DESCRIPTION	QTY
		1 2 3 4	
1	102196601	Wire Harness	1
2	101795701	Wire Assembly, #6 Black	5
3	101978101	Wire Assembly, #10 Orange	1
4	102199601	Wire Assembly, #6 Red	1
5	101978201	Wire Assembly, #10 Blue	1
6	101968701	Wire Assembly, #6 White	2
7	101978001	Wire Assembly, #6 Green	1
8	101920001	Wire Assembly, #6 Yellow	1
9	102263601	Wire Assembly, #10 Black	1

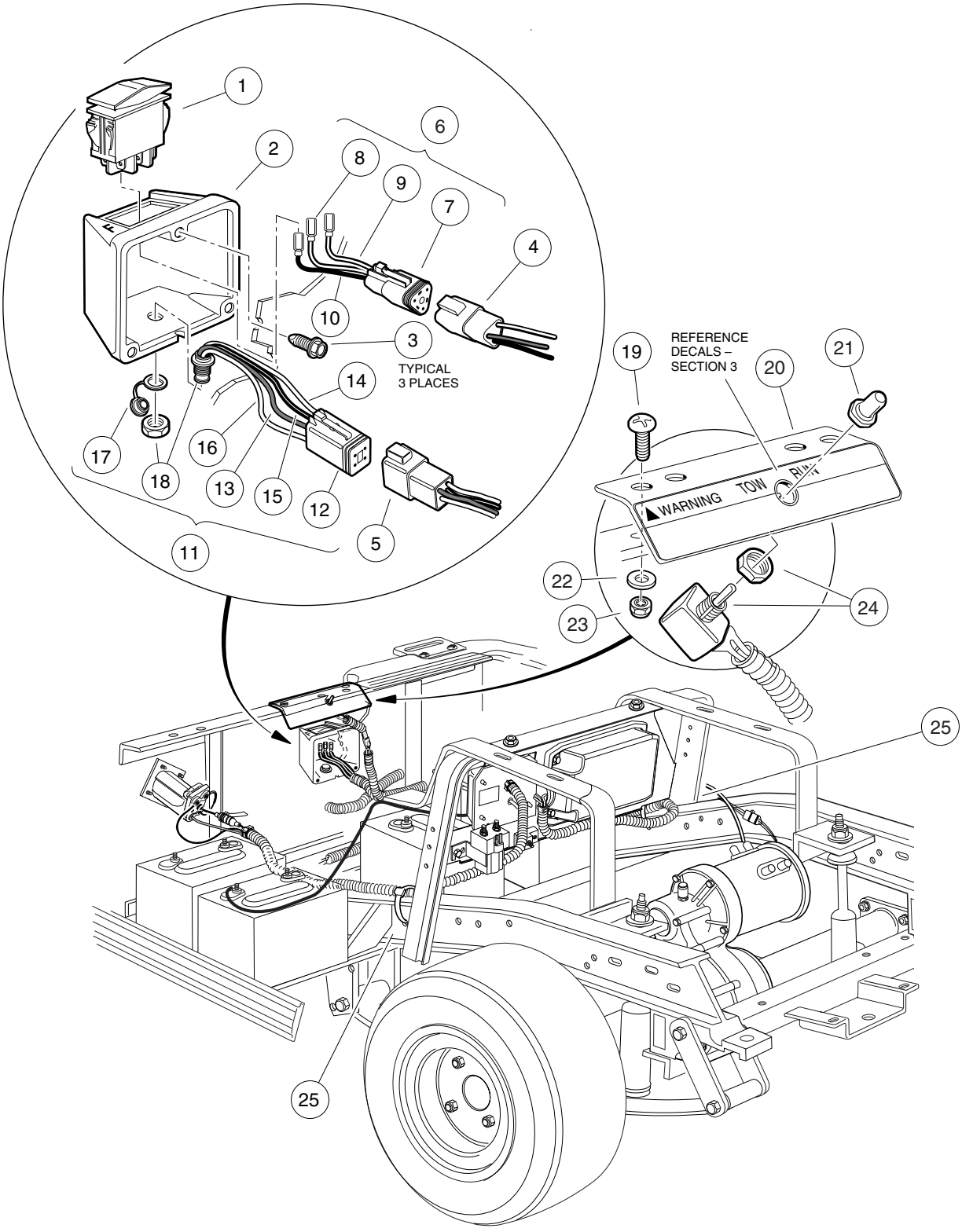
1
2
6
8
9
7
4
10
3
TYPICAL
3 PLACES
14
17
16
18
13
15
12
5
11
19
REFERENCE
DECALS –
SECTION 3
20
21
WARNING
TOW
22
23
24
25
25

FORWARD/REVERSE SWITCH, TOW/RUN SWITCH – VILLAGER 4 IQ SYSTEM VEHICLE

ITEM	PART NO.	DESCRIPTION	QTY
		1 2 3 4	
1	101856001	Switch, Forward/Reverse	1
2	101855002	Case, Forward/Reverse Switch	1
3	101856101	Screw, Hex Washer-Head Hi-Lo, 1/4-15 x 1/2	3
4	101942301	Kit, 3-Pin Receptacle and Wedge Lock	1
5	101932401	Kit, 4-Pin Receptacle and Wedge Lock	1
6	102266601	Wire Assembly, Forward/Reverse Switch (includes items 7 - 10)	1
7	101920101	Kit, 3-Pin Plug and Wedge Lock	1
8	N/A	Wire Assembly, #18 Blue	1
9	N/A	Wire Assembly, #18 Orange	1
10	N/A	Wire Assembly, #18 Brown	1
11	102266701	Wire Assembly, IQDM Port (includes items 12 - 18)	1
12	101932501	Kit, 4-Pin Plug and Wedge Lock	1
13	N/A	Wire Assembly, #18 Red/Yellow	1
14	N/A	Wire Assembly, #18 Black/Yellow	1
15	N/A	Wire Assembly, #18 Blue/Yellow	1
16	N/A	Wire Assembly, #18 Green/Yellow	1
17	N/A	Cap, Dust	1
18	N/A	Connector, 4-Pin	1
19	8248	Screw, Phillips Truss-Head, 1/4-20 x 3/4	2
20	101922501	Bracket, Tow/Run Switch (without decal)	1
21	101908401	Boot, Tow/Run Switch (with nut)	1
22	332	Washer, Flat, 1/4	2
23	8233	Nut, Nylon Lock, 1/4-20	2
24	101908101	Switch, Tow/Run	1
25	8990	Tie, Wire	A/R

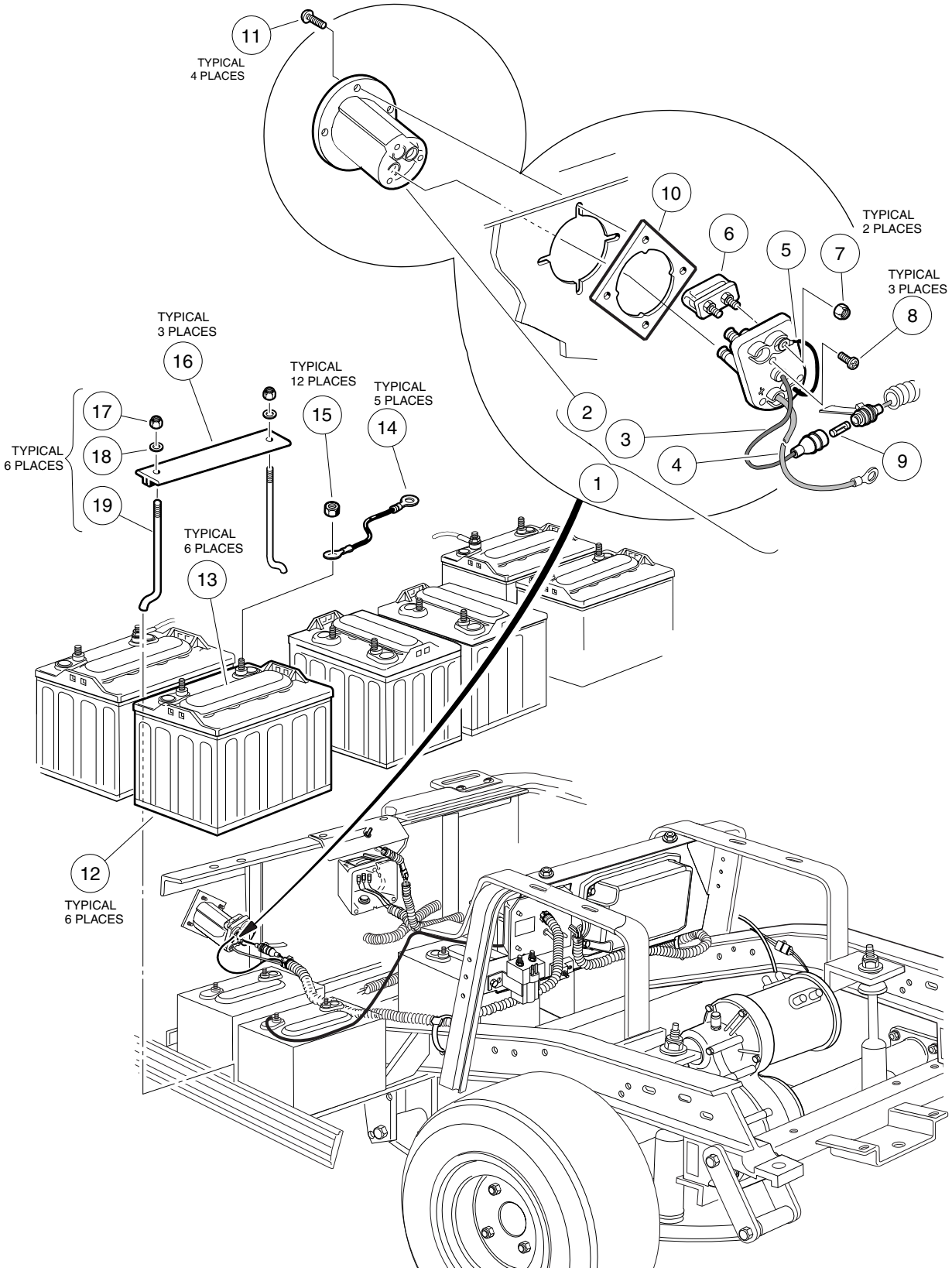
11
TYPICAL
4 PLACES
10
6
5
7
TYPICAL
2 PLACES
TYPICAL
3 PLACES
8
TYPICAL
3 PLACES
16
TYPICAL
12 PLACES
15
TYPICAL
5 PLACES
14
17
18
TYPICAL
6 PLACES
19
2
3
4
9
1
TYPICAL
6 PLACES
13
12
TYPICAL
6 PLACES

BATTERIES, CHARGER RECEPTACLE – VILLAGER 4 IQ SYSTEM VEHICLE

ITEM	PART NO.	DESCRIPTION	QTY
		1 2 3 4	
1	101802101	Kit, Fuse and Receptacle (includes items 2 - 9)	1
2	101796501	Bezel, Receptacle	1
3	N/A	Wire Assembly, Sense Lead, Gray	1
4	N/A	Wire Assembly, #10 Red	1
5	N/A	Wire Assembly, #10 Black	1
6	101796801	Assembly, Fuse, 48-Volt (includes item 7)	1
7	1013061	Nut, Nylon Lock, #10	2
8	1017705	Screw, Phillips Pan-Head, #8 Type AB	3
9	101894901	Fuse, 3/8-Amp	1
10	101801001	Plate, Receptacle Backing	1
11	101832001	Screw, Phillips Pan-Head, #7-18 x 3/4	4
12	101797701	Battery, 8-Volt PowerDrive (includes item 13)	6
12	101797702	Battery, 8-Volt PowerDrive, Dry (includes item 13)	6
13	101797801	Cap, Battery, 4-Port Gang	1
14	101795701	Wire Assembly, #6 Black	5
15	1014304	Nut, Hex, Stainless Steel, 5/16-18	12
16	101090801	Hold-Down, Battery	3
17	1015072	Nut, Nylon Lock, Stainless Steel, 5/16-18	6
18	1011578	Washer, Flat, Type B Wide, 5/16	6
19	1013683	J-Bolt	6

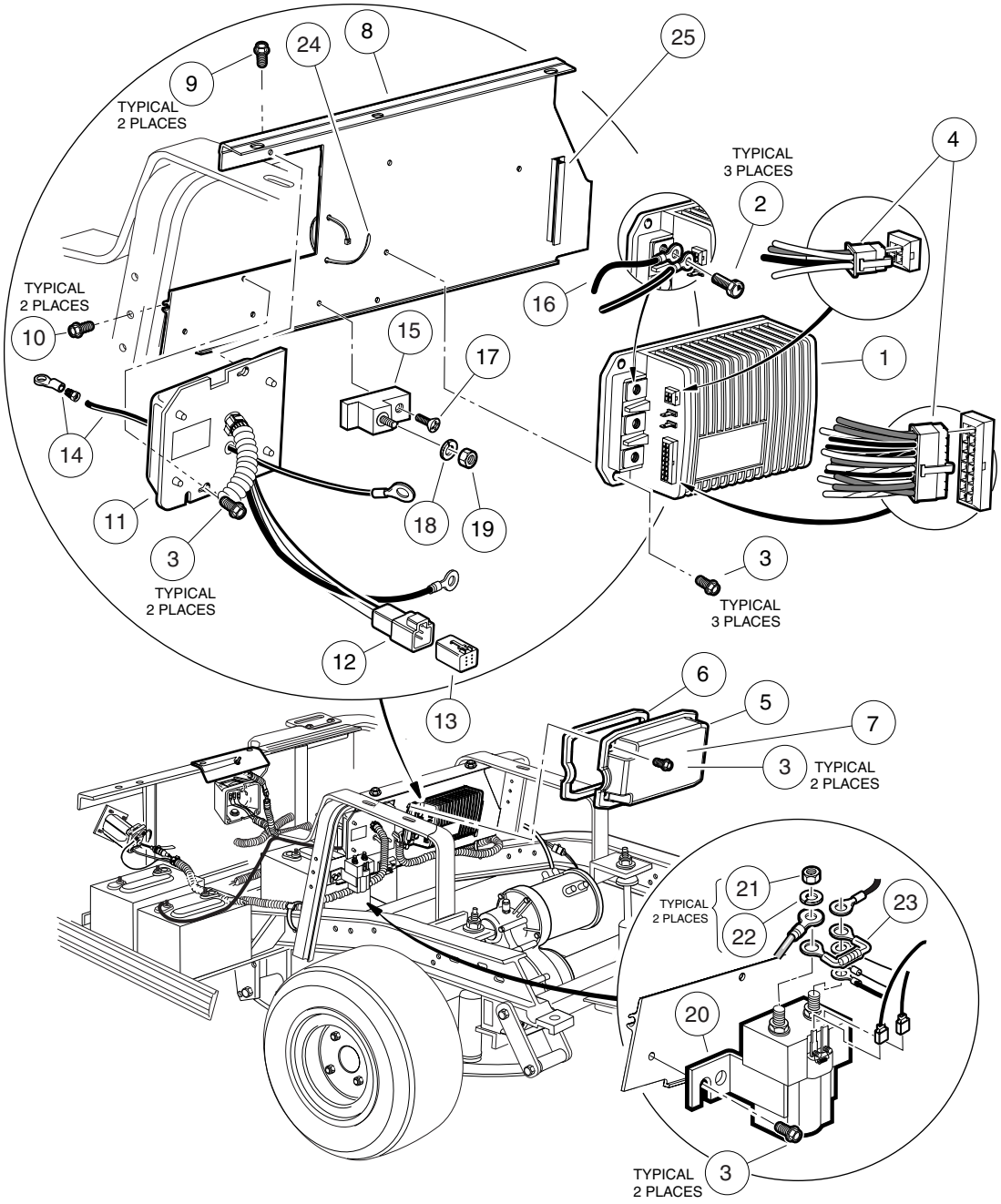
9
TYPICAL
2 PLACES
24
8
25
4
TYPICAL
3 PLACES
2
16
TYPICAL
2 PLACES
10
15
17
1
14
11
18
19
3
TYPICAL
2 PLACES
3
TYPICAL
3 PLACES
12
13
6
5
7
3
TYPICAL
2 PLACES
TYPICAL
2 PLACES
21
22
23
20
TYPICAL
2 PLACES
3

COMPUTER, CONTROLLER, AND SOLENOID – VILLAGER 4 IQ SYSTEM VEHICLE

ITEM	PART NO.	DESCRIPTION	QTY
		1 2 3 4	
1	101956501	Controller, 48-Volt (250-amp)	1
1	101956502	Controller, 48-Volt (250-amp) (customized programming)	1
2	102240501	Screw, Hex Washer-Head, M8 x 1-1/4 x 12 mm	3
3	1012285	Screw, Hex, Type TT, 1/4-20 x 5/8	9
4	102266501	Kit, Connector, IQ Controller	1
5	102240601	Cover, Controller (includes items 6 and 7)	1
6	102240801	Gasket, Controller	1
7	101931501	Decal, Electrical Component Cover	1
8	101965202	Plate, Component Mounting	1
9	1014288	Screw, Thread-Forming, 5/16-18 x 3/4	2
10	101910401	Screw, Thread-Forming, 5/16-18 x 1-1/4	2
11	101909902	Computer, Onboard (includes item 12)	1
12	101932601	Kit, 6-Pin Receptacle	1
13	101932701	Kit, 6-Pin Plug Assembly	1
14	101827801	Kit, Wire and Terminal, #6 Black	1
15	102259801	Block, Terminal (controller)	1
16	102263601	Wire Assembly, #10 Black	1
17	102263701	Screw, Phillips, Thread-Forming, #10-24 x 3/4	1
18	7174	Washer, Lock, 5/16	1
19	1242	Nut, Hex, 5/16-18	1
20	101908701	Solenoid, 48-Volt (with diode) (includes items 21 and 22)	1
21	1012528	Nut, M8 x 1-1/4	2
22	1013734	Washer, Lock, 8 mm	2
23	1014947	Assembly, Resistor	1
24	8639	Tie, Wire	1
25	****	Z-Bracket, Controller Cover	1

**** Special order item available upon request.

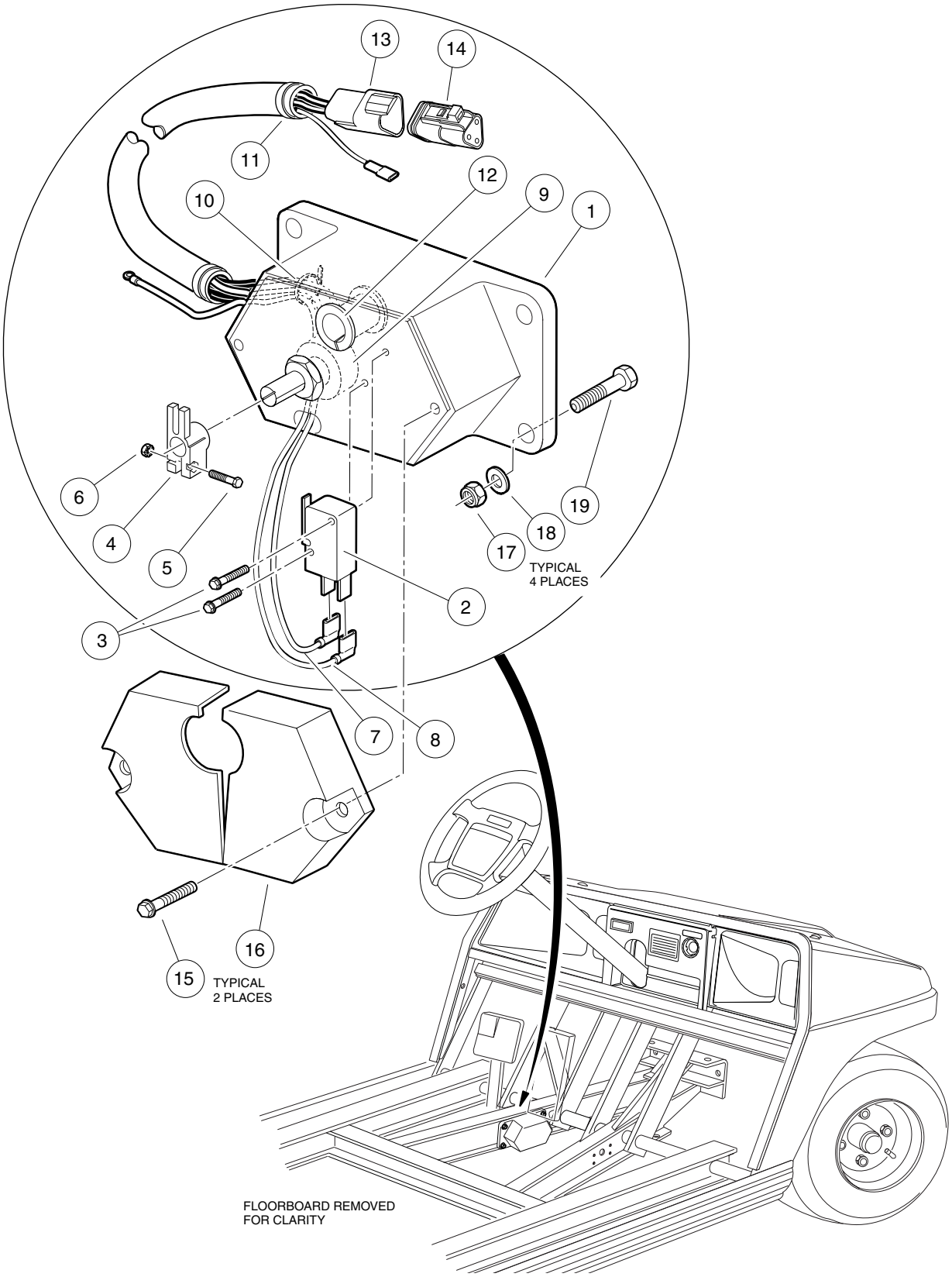
13
14
11
12
9
1
10
6
4
5
19
18
17
TYPICAL
4 PLACES
2
3
7
8
16
15
TYPICAL
2 PLACES
FLOORBOARD REMOVED
FOR CLARITY

CONTINUOUSLY VARIABLE POTENTIOMETER – VILLAGER 6 AND 8, TRANSPORTER 4 AND 6 VEHICLES

ITEM	PART NO.	DESCRIPTION	QTY
		1 2 3 4	
		NOTE: See page 12-9 for the MCOR Conversion Kit.	
		This page pertains to vehicles with serial numbers lower than 0112-001470.	
	101739201	Assembly, Potentiometer Housing with Gray Plug (includes items 1 - 13)	1
1	N/A	Housing, Potentiometer	1
2	1017830	Switch, Limit	1
3	101822601	Screw, Hex-Head, #4-24	2
4	101809001	Lever, Potentiometer	1
5	1017853	Screw, Hex-Head, #6-32 x 3/4	1
6	1011229	Nut, Lock, “K”, #6-32	1
7	N/A	Wire Assembly, #18 Blue	1
8	N/A	Wire Assembly, #18 Green/White	1
9	N/A	Potentiometer	1
10	8990	Tie, Wire	3
11	N/A	Conduit, Electrical	1
12	1017424	Bearing, Pivot Support	1
13	101895101	Receptacle, 3-Pin	1
14	101920101	Kit, 3-Pin Plug	1
15	101804301	Screw, Hex-Head Hi-Lo, #8-18 x 1/2	2
16	1017743	Cover, Accelerator	1
17	8233	Nut, Nylon Lock, 1/4-20	4
18	332	Washer, Flat, 1/4	4
19	101861901	Screw, Hex-Head Cap, 1/4-20 x 1-1/8	4

ELECTRIC VILLAGER 6 AND VILLAGER 8 WIRING (CVP)

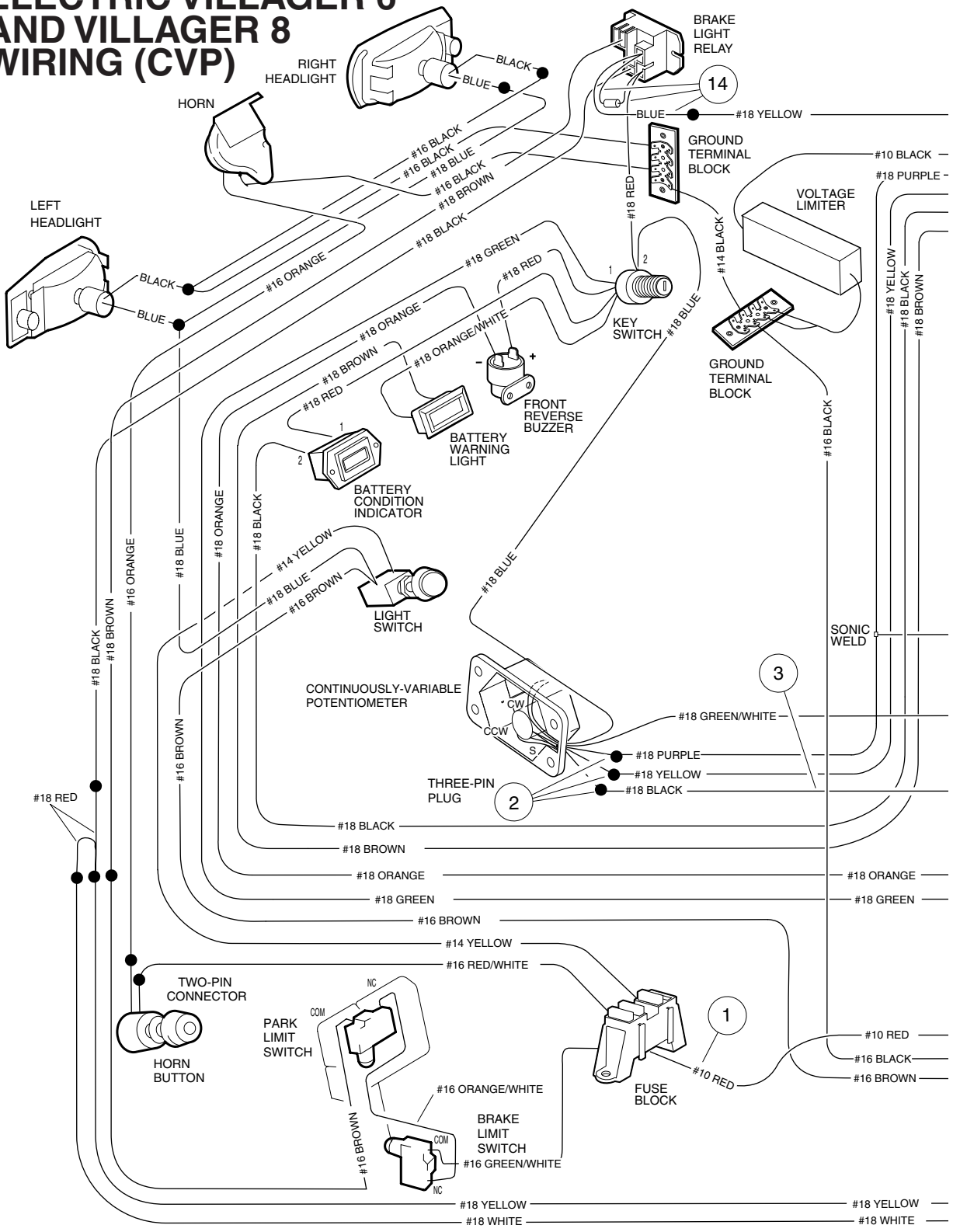

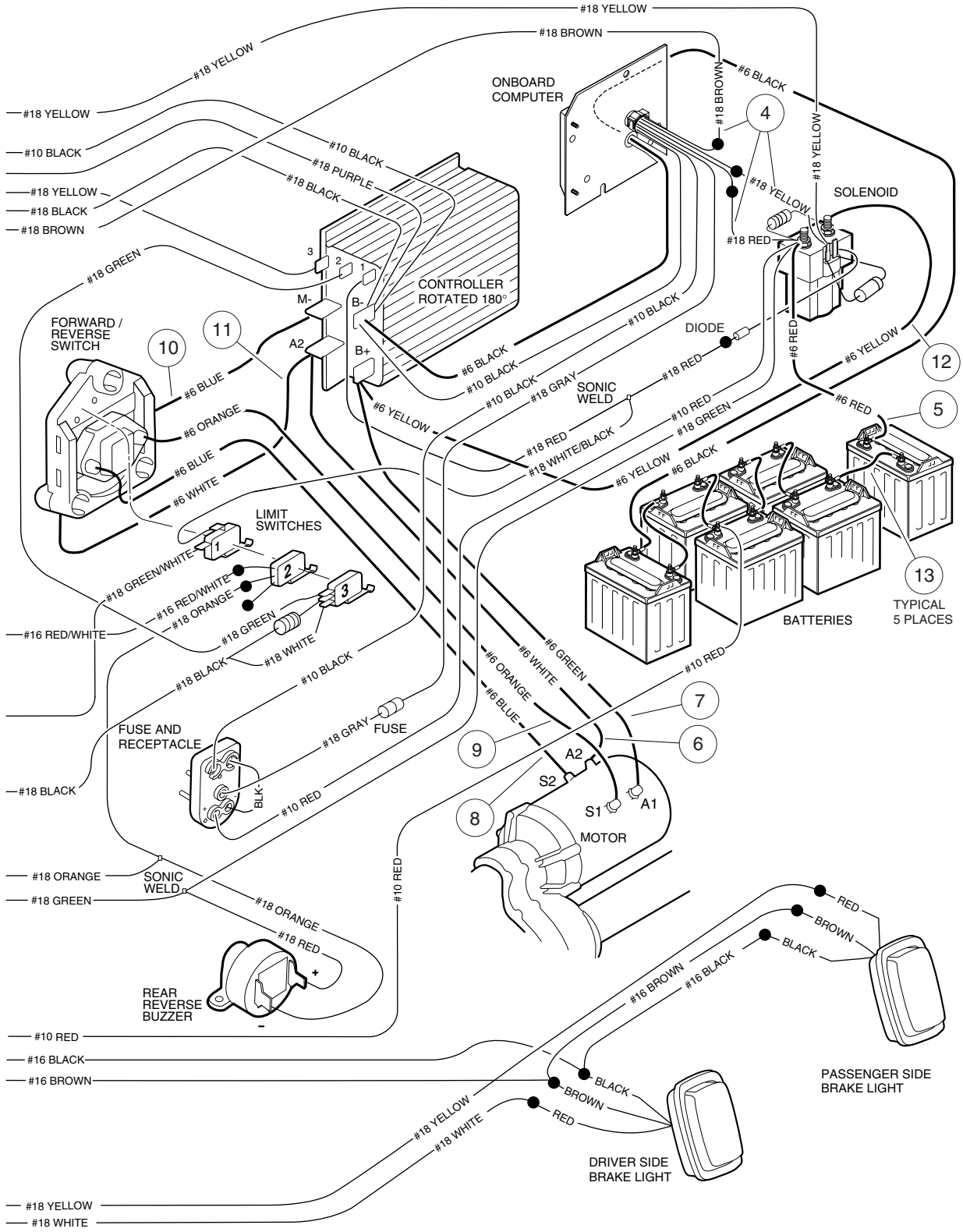
#18 YELLOW
#18 BROWN
#18 YELLOW
#10 BLACK
#18 YELLOW
#18 BLACK
#18 BROWN
#18 GREEN
#10 BLACK
#18 PURPLE
#18 BLACK
ONBOARD COMPUTER
#18 BROWN
#6 BLACK
4
#18 YELLOW
#18 YELLOW
SOLENOID
#18 RED
3
2
1
M-
B-
B+
A2
CONTROLLER ROTATED 180°
FORWARD / REVERSE SWITCH
10
11
#6 BLUE
#6 ORANGE
#6 BLUE
#6 WHITE
#6 BLACK
#10 BLACK
#10 BLACK
#18 GRAY
SONIC WELD
DIODE
#18 RED
#6 RED
#6 YELLOW
12
#6 YELLOW
#10 RED
#18 GREEN
#6 RED
5
#18 RED
#18 WHITE/BLACK
#6 YELLOW
#6 BLACK
LIMIT SWITCHES
#18 GREEN/WHITE
#16 RED/WHITE
#18 ORANGE
#18 GREEN
#18 WHITE
#16 RED/WHITE
#18 BLACK
#10 BLACK
#6 GREEN
#6 WHITE
#6 ORANGE
#6 BLUE
#10 RED
13
TYPICAL 5 PLACES
BATTERIES
7
6
9
FUSE AND RECEPTACLE
#18 GRAY
FUSE
BLK-
#10 RED
#18 BLACK
A2
S2
S1
A1
8
MOTOR
#18 ORANGE
SONIC WELD
#18 GREEN
#18 ORANGE
#18 RED
#10 RED
REAR REVERSE BUZZER
#10 RED
#16 BLACK
#16 BROWN
#16 BROWN
#16 BLACK
RED
BROWN
BLACK
PASSENGER SIDE BRAKE LIGHT
BLACK
BROWN
RED
#18 YELLOW
#18 WHITE
DRIVER SIDE BRAKE LIGHT
#18 YELLOW
#18 WHITE

See previous two pages for wiring diagram.

WIRING – POWERDRIVE SYSTEM 48 VILLAGER 6 AND 8 WITH CONTINUOUSLY VARIABLE POTENTIOMETER

ITEM	PART NO.	DESCRIPTION	QTY
		1 2 3 4	
		For Villager 6 and 8 vehicles with serial numbers lower than 0112-001470.	
	101969301	Wire Harness, Lighting (includes item 1)	1
1	1016698	Wire Assembly, #10 Red	1
	101911601	Wire Harness, Power (includes item 2 - 4)	1
2	101865106	Assembly, 3-Wire Plug (includes item 3)	1
3	101883002	Wire Assembly, #18 Black (includes resistor and #18 white wire)	1
4	101930801	Assembly, 3-Pin Plug	1
5	101904502	Wire Assembly, #6 Red (Villager 6 only)	1
5	101904503	Wire Assembly, #6 Red (Villager 8 only)	1
6	101908902	Wire Assembly, #6 White (Villager 6 only)	1
6	101908903	Wire Assembly, #6 White (Villager 8 only)	1
7	101904402	Wire Assembly, #6 Green (Villager 6 only)	1
7	101904403	Wire Assembly, #6 Green (Villager 8 only)	1
8	101904602	Wire Assembly, #6 Blue (Villager 6 only)	1
8	101904603	Wire Assembly, #6 Blue (Villager 8 only)	1
9	101904702	Wire Assembly, #6 Orange (Villager 6 only)	1
9	101904703	Wire Assembly, #6 Orange (Villager 8 only)	1
10	101908801	Wire Assembly, #6 Blue	1
11	1016729	Wire Assembly, #6 White	1
12	1016732	Wire Assembly, #6 Yellow	1
13	101795701	Wire Assembly, #6 Black	5
14	101914401	Assembly, Voltage Suppressor (includes #18 red and #18 blue)	1

ELECTRIC VILLAGER 6 AND VILLAGER 8 WIRING (MCOR)

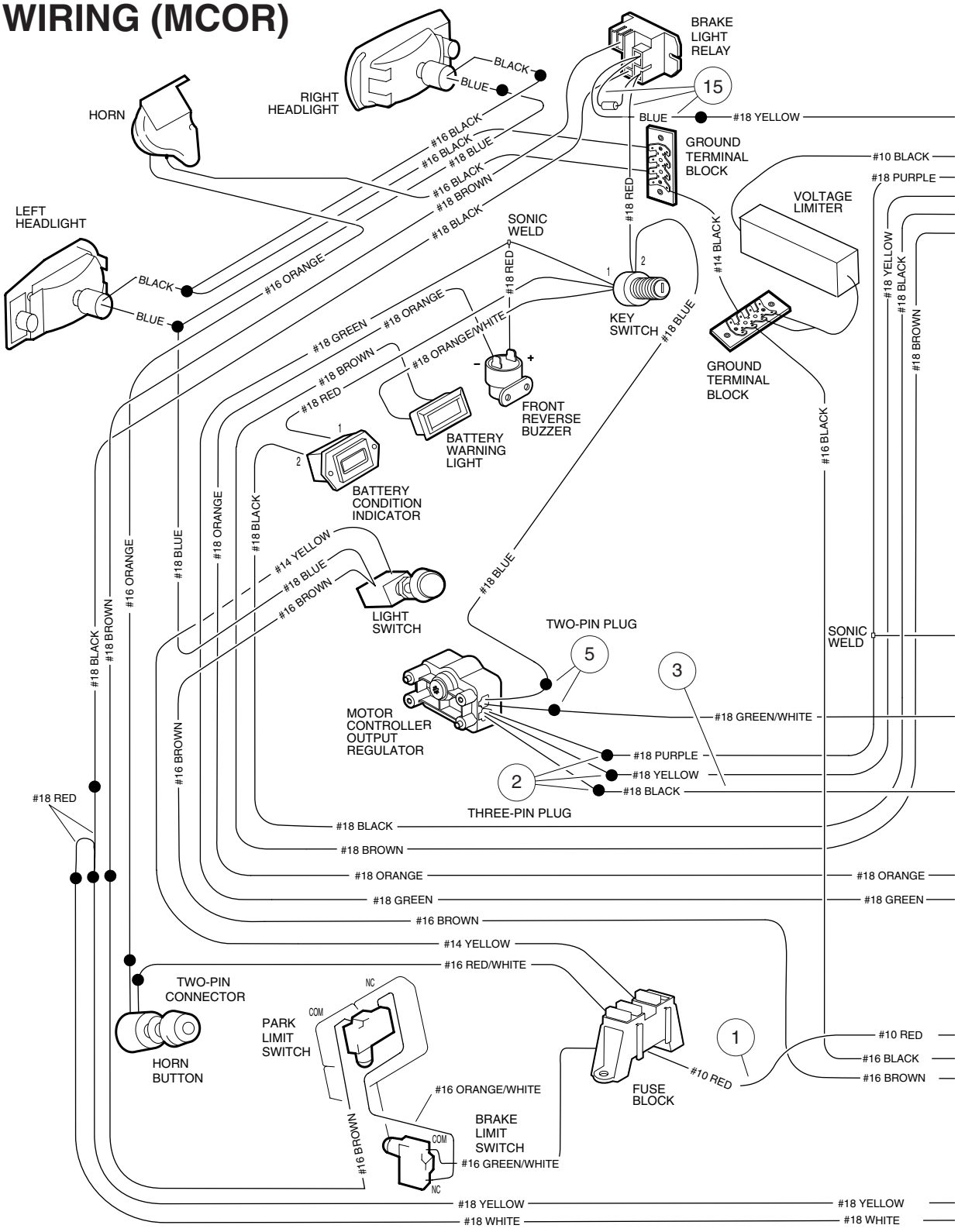

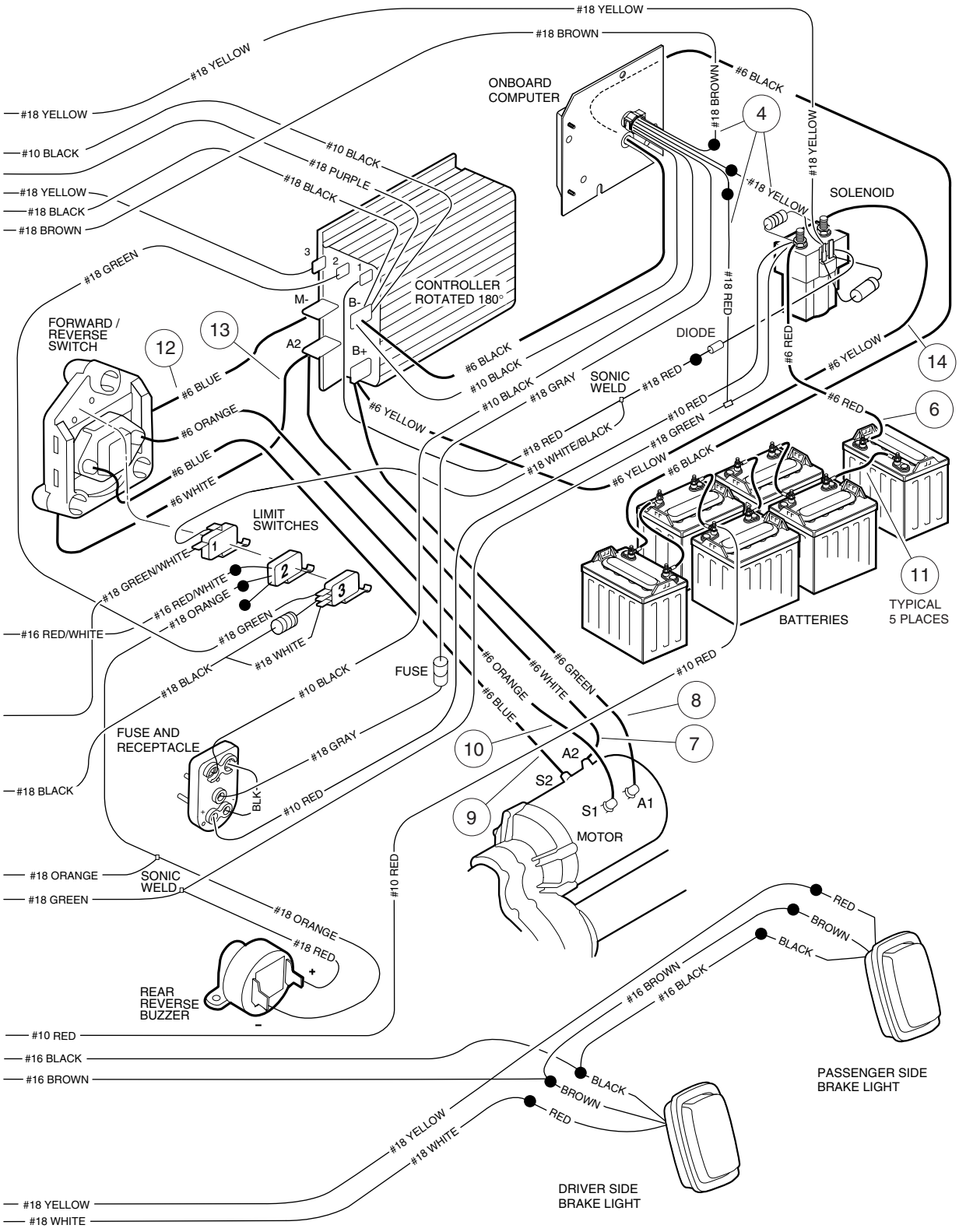
#18 YELLOW
#18 BROWN
#18 YELLOW
ONBOARD COMPUTER
#6 BLACK
#18 BROWN
4
#18 YELLOW
#18 YELLOW
#10 BLACK
#10 BLACK
#18 PURPLE
#18 BLACK
#18 YELLOW
#18 BLACK
#18 BROWN
SOLENOID
#18 GREEN
3
2
1
M-
B-
CONTROLLER ROTATED 180°
#18 RED
FORWARD / REVERSE SWITCH
12
13
A2
B+
#6 BLACK
#10 BLACK
#18 GRAY
DIODE
SONIC WELD
#18 RED
#6 RED
#6 YELLOW
14
#6 BLUE
#6 ORANGE
#6 BLUE
#6 WHITE
#6 YELLOW
#18 RED
#18 WHITE/BLACK
#10 RED
#18 GREEN
#6 RED
6
#6 BLACK
#6 YELLOW
LIMIT SWITCHES
#18 GREEN/WHITE
#16 RED/WHITE
#18 ORANGE
#18 GREEN
#18 WHITE
11
TYPICAL 5 PLACES
BATTERIES
#16 RED/WHITE
#18 BLACK
#10 BLACK
FUSE
#6 ORANGE
#6 BLUE
#6 WHITE
#6 GREEN
#10 RED
8
7
10
FUSE AND RECEPTACLE
#18 GRAY
#18 BLACK
BLK
#10 RED
A2
S2
S1
A1
9
MOTOR
#18 ORANGE
SONIC WELD
#18 GREEN
#18 ORANGE
#18 RED
#10 RED
REAR REVERSE BUZZER
RED
BROWN
BLACK
#16 BROWN
#16 BLACK
#10 RED
#16 BLACK
#16 BROWN
BLACK
BROWN
RED
PASSENGER SIDE BRAKE LIGHT
#18 YELLOW
#18 WHITE
#18 YELLOW
#18 WHITE
DRIVER SIDE BRAKE LIGHT

See previous two pages for wiring diagram.

ITEM	PART NO.	DESCRIPTION	QTY
		1 2 3 4	
		For Villager 6 and 8 vehicles with serial numbers 0112-001470 and greater.	
	101969301	Wire Harness, Lighting (includes item 1)	1
1	1016698	Wire Assembly, #10 Red	1
	101911601	Wire Harness, Power (includes item 2 - 5)	1
2	101865106	Assembly, 3-Wire Plug (includes item 3)	1
3	101883002	Wire Assembly, #18 Black (includes resistor and #18 white wire)	1
4	101930801	Assembly, 3-Pin Plug	1
5	101936801	Assembly, 2-Pin Plug	1
6	101904502	Wire Assembly, #6 Red (Villager 6 only)	1
6	101904503	Wire Assembly, #6 Red (Villager 8 only)	1
7	101908902	Wire Assembly, #6 White (Villager 6 only)	1
7	101908903	Wire Assembly, #6 White (Villager 8 only)	1
8	101904402	Wire Assembly, #6 Green (Villager 6 only)	1
8	101904403	Wire Assembly, #6 Green (Villager 8 only)	1
9	101904602	Wire Assembly, #6 Blue (Villager 6 only)	1
9	101904603	Wire Assembly, #6 Blue (Villager 8 only)	1
10	101904702	Wire Assembly, #6 Orange (Villager 6 only)	1
10	101904703	Wire Assembly, #6 Orange (Villager 8 only)	1
11	101795701	Wire Assembly, #6 Black	5
12	101908801	Wire Assembly, #6 Blue	1
13	1016729	Wire Assembly, #6 White	1
14	1016732	Wire Assembly, #6 Yellow	1
15	101914401	Assembly, Voltage Suppressor (includes #18 red and #18 blue)	1

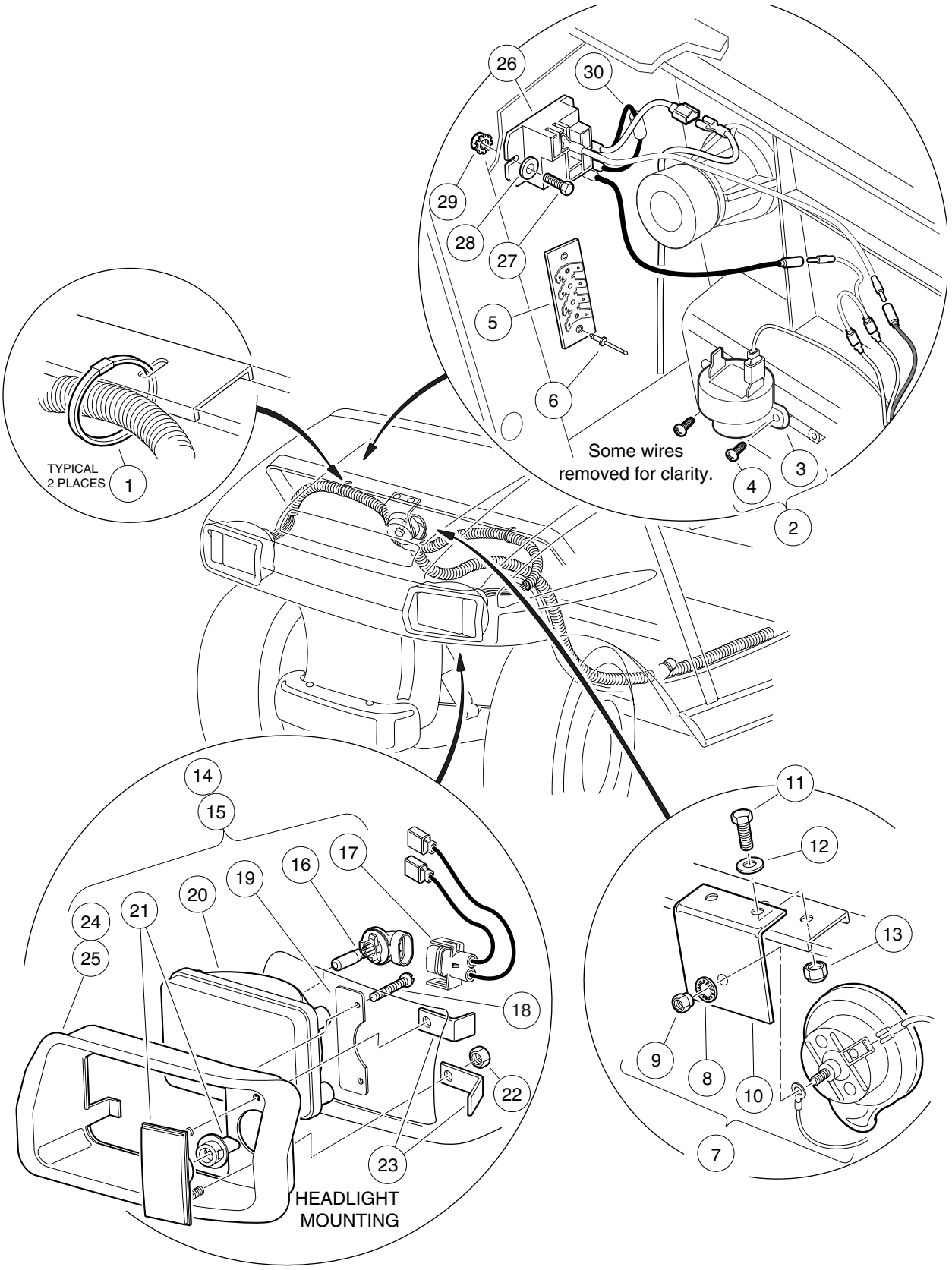
26
30
29
28
27
5
6
Some wires
removed for clarity.
4
3
2
TYPICAL
2 PLACES
1
14
15
16
17
19
20
21
24
25
18
22
23
HEADLIGHT
MOUNTING
11
12
13
9
8
10
7

ELECTRICAL COMPONENTS, FRONT BODY – VILLAGER 6 AND 8, TRANSPORTER 4 AND 6 VEHICLES

ITEM	PART NO.	DESCRIPTION	QTY
		1 2 3 4	
1	8639	Tie, Wire	2
2	1016859	Kit, Reverse Buzzer (includes items 3 and 4)	1
3	1016851	Buzzer, Reverse	1
4	1016849	Screw, Pan-Head Hi-Lo, #4-24 x 5/16	2
5	1016356	Block, Terminal	1
6	1013357	Rivet, Aluminum Pop, 5/32 x 3/8	2
7	4029	Assembly, Horn (includes items 8 - 10)	1
8	7820	Washer, Internal Tooth, 5/16	1
9	101955101	Nut, M6 x 1.25	1
10	1011825	Bracket, Horn	1
11	304	Screw, Hex-Head Cap, 1/4-20 x 1	2
12	332	Washer, Flat, 1/4	2
13	8233	Nut, Nylon Lock, 1/4-20	2
14	101988001	Assembly, Headlight, Driver-Side (includes items 16 - 24)	1
15	101988002	Assembly, Headlight, Passenger-Side (includes items 16 - 23 and 25)	1
16	101988101	Bulb, Halogen	1
17	101987901	Harness, Headlight Wire	1
18	1013461	Screw, Hi-Lo, #10-16	2
19	1017065	Retainer, Headlight	1
20	101988201	Lens, Headlight	1
21	1017062	Assembly, Turn Signal Lens	1
22	7893	Nut, Hex, #10-32	2
23	1017064	Bracket, Mounting	2
24	1016880	Bezel, Headlight, Driver-Side	1
25	1016879	Bezel, Headlight, Passenger-Side	1
26	101828601	Relay, Brake Light, 48-volt	1
27	1017853	Bolt, Hex-Head Machine, 6-32 x 3/4	2
28	7591	Washer, Flat,	2
29	1011229	Nut, Lock, Hex, 6-32	2
30	101914401	Assembly, Voltage Suppressor	

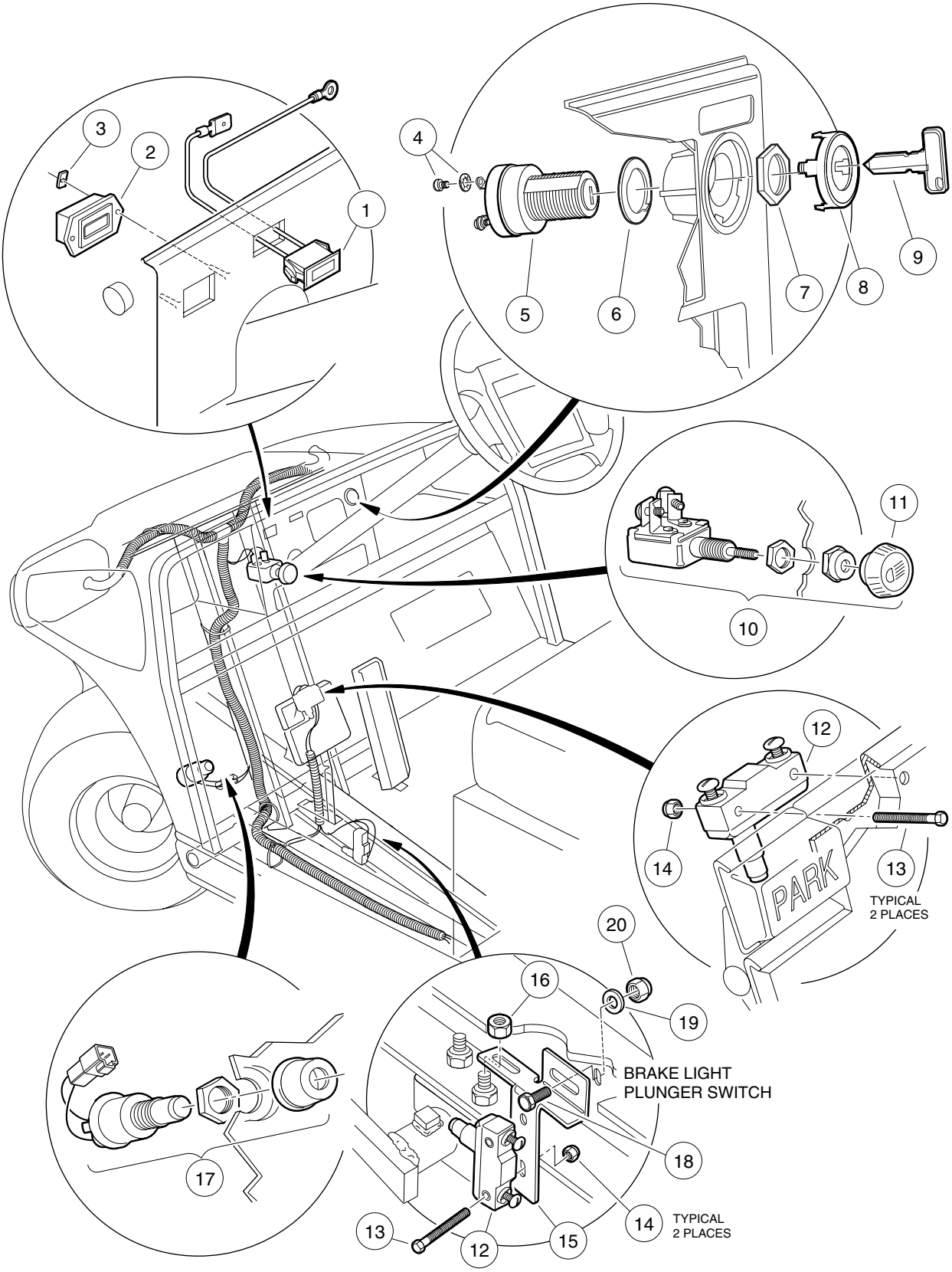
3
2
1
4
5
6
7
8
9
11
10
12
14
13
PARK
TYPICAL
2 PLACES
20
16
19
BRAKE LIGHT
PLUNGER SWITCH
18
17
13
12
15
14
TYPICAL
2 PLACES

ITEM	PART NO.	DESCRIPTION	QTY
		1 2 3 4	
1	101935501	Light, Battery Warning (amber)	1
2	101814201	Indicator, Battery Condition	1
3	101814701	Retainer, Push On	2
4	101830601	Assembly, Screw and Washer	2
5	101826201	Switch, Key	1
6	101851101	Washer	1
7	101830701	Nut, Key Switch	1
8	101834502	Cap, Key Switch	1
9	1012505	Key (Pair)	1
10	4034	Switch, Light (includes item 11)	1
11	1013857	Knob, Light Switch	1
12	1011439	Switch, Limit	2
13	1011557	Screw, Hex-Head Machine, #6-32 x 1	4
14	101932201	Nut, Nylon Lock, #6-32	4
15	101957101	Bracket, Brake Light Switch	1
16	1011280	Nut, Lock, 5/16-18	1
17	101969701	Button, Horn	1
18	7173	Bolt, Hex-Head, Cap, 5/16-18 x 3/4	1
19	1241	Washer, Flat, 5/16-18	1
20	7473	Nut, Nylon Lock, 5/16-18	1

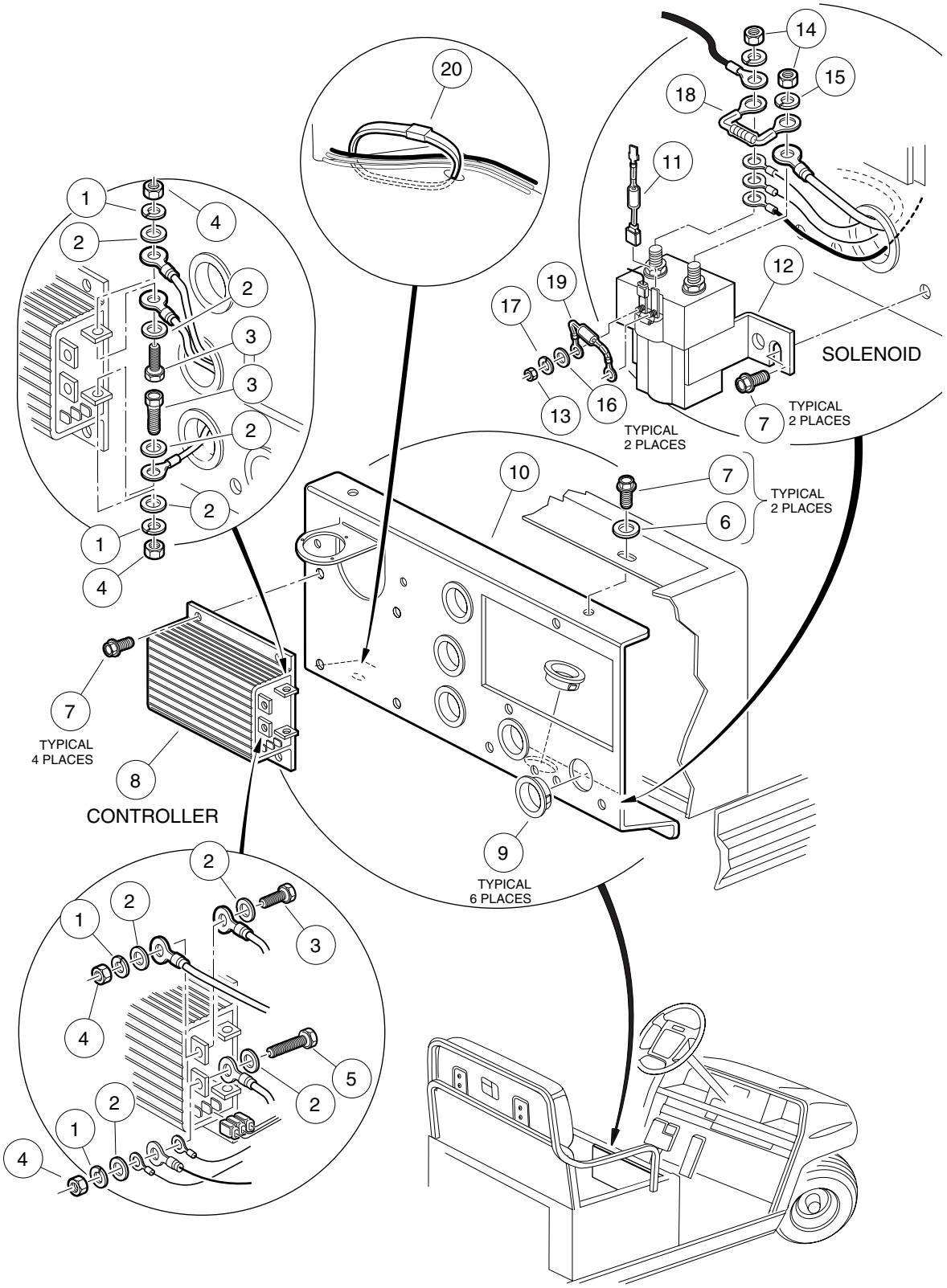
20
14
15
18
11
12
19
17
16
13
SOLENOID
TYPICAL
2 PLACES
7
TYPICAL
2 PLACES
10
6
1
2
3
4
TYPICAL
4 PLACES
8
CONTROLLER
9
TYPICAL
6 PLACES
5

ELECTRICAL COMPONENTS, CENTER BODY – VILLAGER 6 AND 8, TRANSPORTER 4 AND 6 VEHICLES

ITEM	PART NO.	DESCRIPTION	QTY
		1 2 3 4	
1	7174	Washer, Lock, 5/16	4
2	1241	Washer, Flat, 5/16	8
3	7173	Screw, Hex-Head Cap, 5/16-18 x 3/4	3
4	1242	Nut, Hex, 5/16-18	4
5	1218	Screw, Hex-Head Cap, 5/16-18 x 1-1/4	1
6	332	Washer, Flat, 1/4 (Villager 6 and Villager 8 only)	2
7	1012285	Screw, Hex-Head Thread-Rolling, 1/4-20 x 5/8	8
8	101840203	Controller, 48-Volt (300-Amp)	1
9	101924301	Bushing, Snap	6
10	101911701	Plate, Mounting	1
11	102273101	Assembly, Diode	1
12	101908701	Solenoid, 48-Volt (with diode) (includes items 13 - 17)	1
13	1016545	Nut, Hex, M5 x 0.8	2
14	1012528	Nut, Hex, M8	2
15	7174	Washer, Lock, 5/16	2
16	N/A	Washer, Flat	2
17	N/A	Washer, Lock	2
18	1014947	Assembly, Resistor	1
19	1014948	Assembly, Diode (Service Part replacement for existing diode that comes standard with solenoid)	1
20	8639	Tie, Wire	1

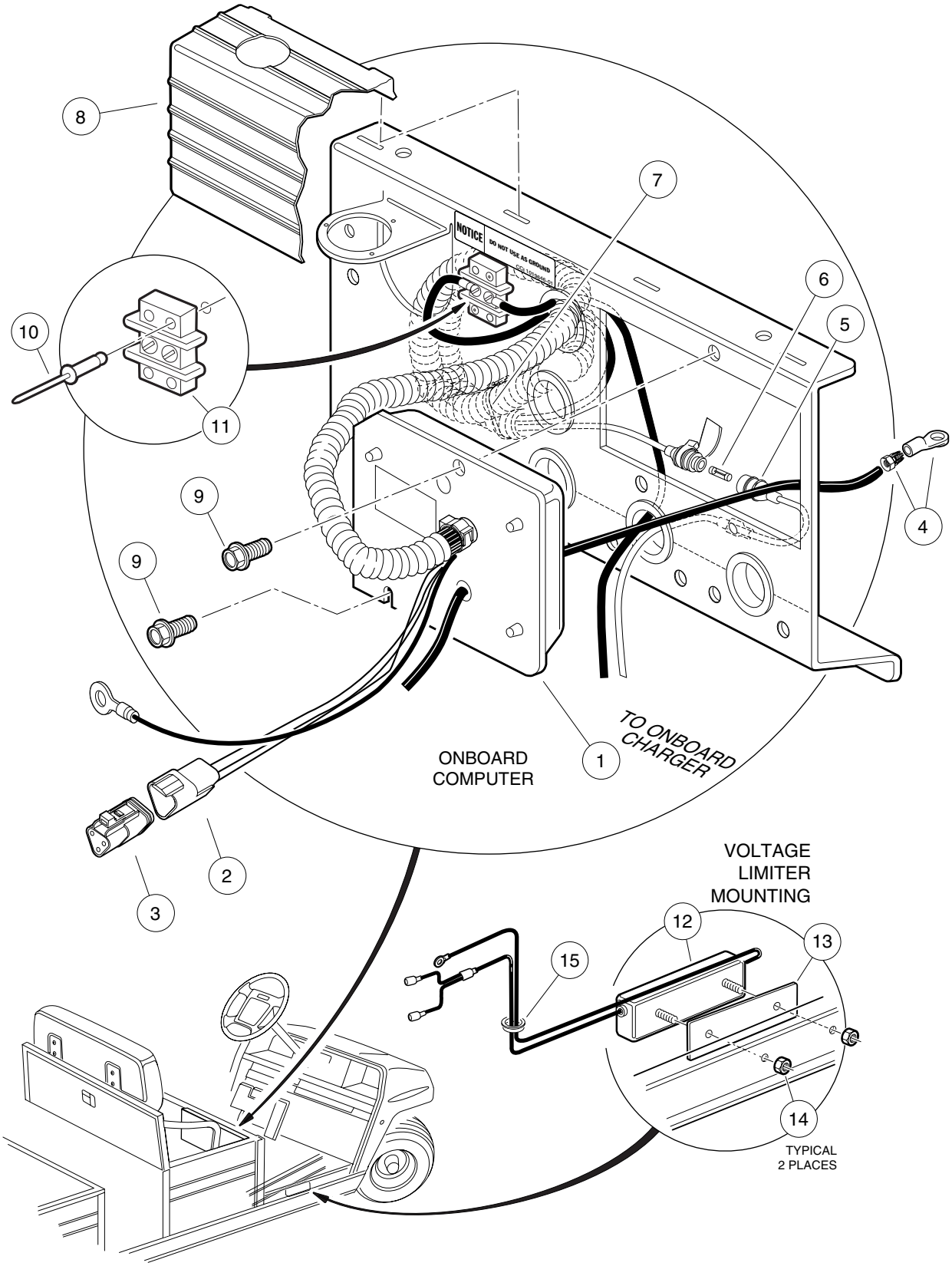
8
7
6
5
10
11
9
9
4
1
TO ONBOARD CHARGER
ONBOARD COMPUTER
2
3
VOLTAGE LIMITER MOUNTING
12
13
15
14
TYPICAL 2 PLACES

ELECTRICAL COMPONENTS, CENTER BODY, CONTINUED – VILLAGER 6 AND 8, TRANSPORTER 4 AND 6 VEHICLES

ITEM	PART NO.	DESCRIPTION	QTY
		1 2 3 4	
1	101909903	Computer, Onboard (includes item 2) (Villager 6, TransPorter 4 and TransPorter 6)	1
1	101909904	Computer, Onboard (includes item 2) (Villager 8)	1
2	101942301	Connector, 3-Pin	1
3	101920101	Kit, 3-Pin Plug Assembly	1
4	101827802	Kit, Wire and Terminal, #6 Black	1
5	101957501	Adapter, Two-Way (includes item 6)	1
6	101894901	Fuse, 3/8-Amp	1
7	8990	Tie, Wire	1
8	101931601	Cover, Component (TransPorter 4 and TransPorter 6 only)	1
9	1012285	Screw, Hex-Head Thread-Rolling, 1/4-20 x 5/8	2
10	101968801	Rivet, Pop, 3/16 x 13/16 (TransPorter 4 and TransPorter 6 only)	2
11	101966801	Block, Terminal (TransPorter 4 and TransPorter 6 only)	1
12	101810801	Limiter, Voltage (includes item 13 and 14)	1
13	101962601	Gasket	1
14	101835601	Nut, Flanged Lock, 1/4-20	2
15	101802401	Grommet, 5/8 (TransPorter 4 and TransPorter 6 only)	1

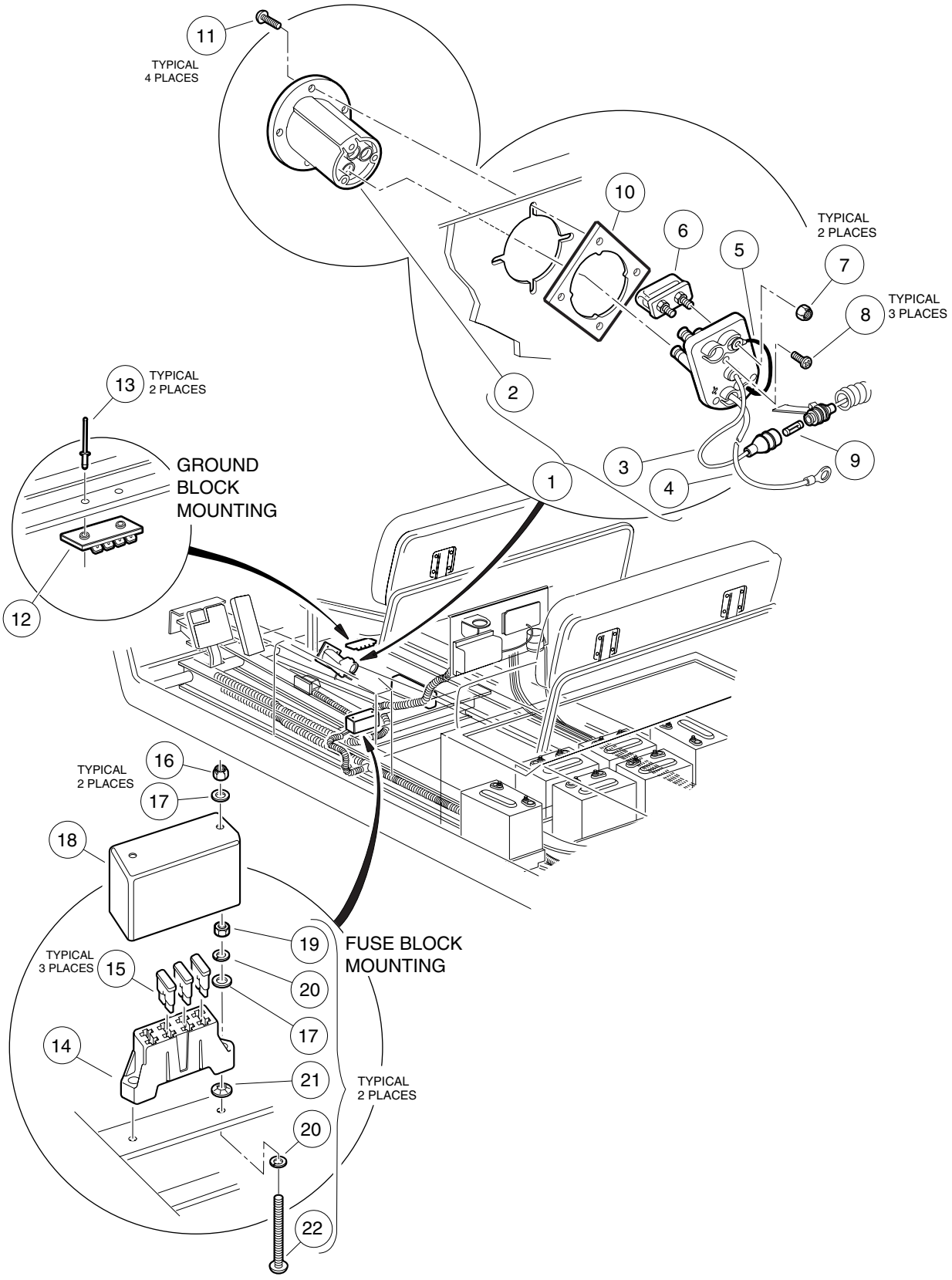
11
TYPICAL
4 PLACES
10
6
5
TYPICAL
2 PLACES
7
8
TYPICAL
3 PLACES
2
13
TYPICAL
2 PLACES
GROUND
BLOCK
MOUNTING
3
4
9
1
12
16
TYPICAL
2 PLACES
17
18
19
FUSE BLOCK
MOUNTING
TYPICAL
3 PLACES
15
20
17
14
21
TYPICAL
2 PLACES
20
22

CHARGER RECEPTACLE – VILLAGER 6 AND VILLAGER 8 VEHICLES

ITEM	PART NO.	DESCRIPTION	QTY
		1 2 3 4	
1	101802101	Kit, Fuse and Receptacle (includes items 2 - 9)	1
2	101796501	Bezel, Receptacle	1
3	N/A	Wire Assembly, Sense Lead – Gray	1
4	N/A	Wire Assembly, #10 Red	1
5	N/A	Wire Assembly, #10 Black	1
6	101796801	Assembly, Fuse, 48-Volt (includes item 7)	1
7	1013061	Nut, Nylon Lock, #10	2
8	1017705	Screw, Phillips Pan-Head, #8 Type AB	3
9	101894901	Fuse, 3/8-Amp	1
10	101801001	Plate, Receptacle Backing	1
11	101832001	Screw, Phillips Pan-Head, #7-18 x 3/4	4
12	1016356	Block, Terminal	1
13	1013357	Rivet, Aluminum Pop, 5/32	2
14	1015741	Block, Fuse	1
15	1016423	Fuse, 20-Amp	3
16	1012438	Nut, Nylon Lock, #10-24	2
17	183	Washer, Flat, #10	4
18	1016363	Cover, Fuse Block	1
19	1017	Nut, Hex, #10-24	2
20	1016	Washer, Lock, #10	4
21	1016631	Nut, Push	2
22	1016366	Screw, Round-Head, #10-24 x 3	2

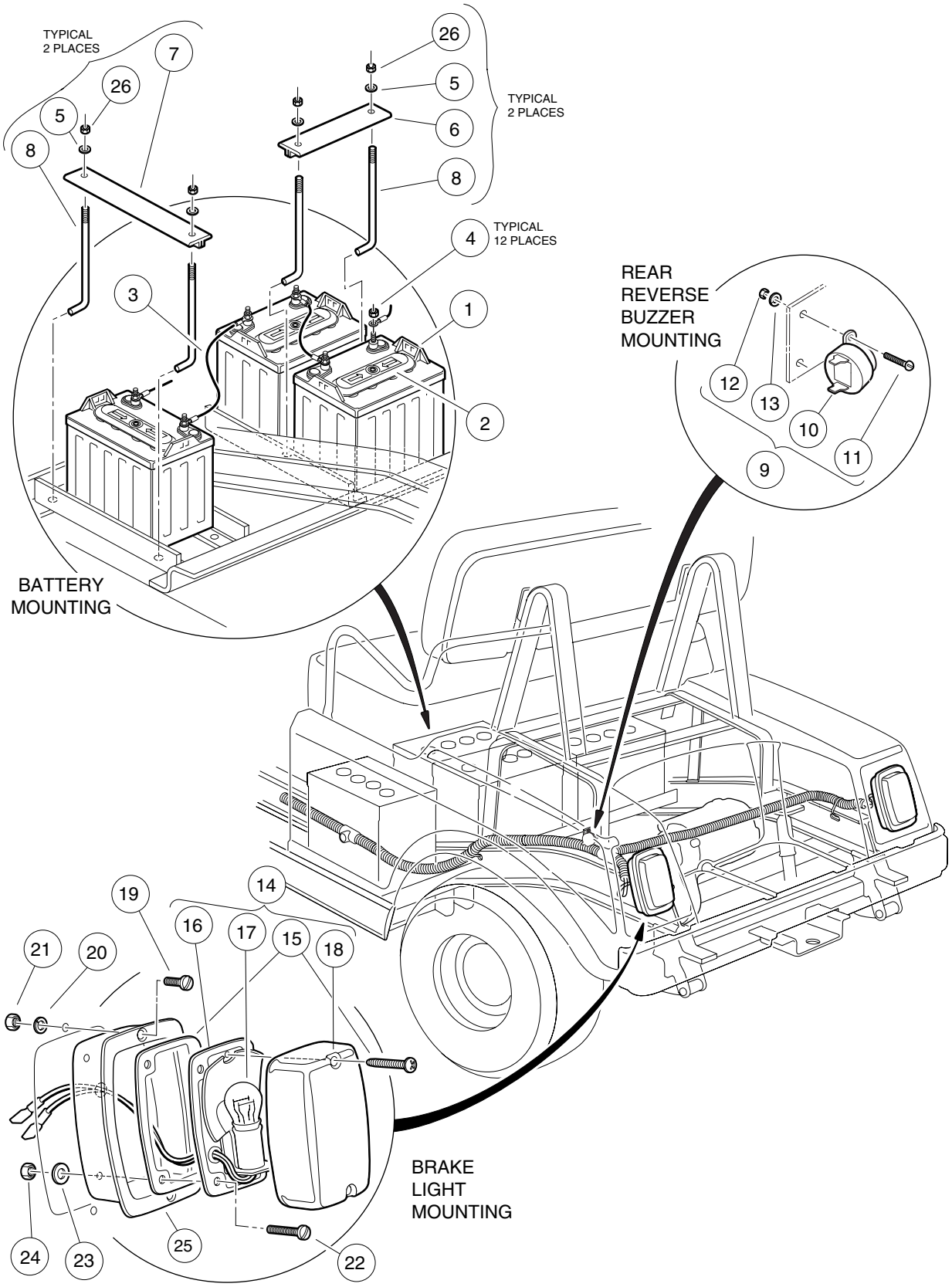
TYPICAL
2 PLACES
7
26
5
8
26
5
6
8
TYPICAL
2 PLACES
4
TYPICAL
12 PLACES
3
1
2
BATTERY
MOUNTING
REAR
REVERSE
BUZZER
MOUNTING
12
13
10
11
9
19
14
16
17
15
18
21
20
BRAKE
LIGHT
MOUNTING
24
23
25
22

ELECTRICAL COMPONENTS, REAR BODY – VILLAGER 6 AND VILLAGER 8 VEHICLES

ITEM	PART NO.	DESCRIPTION	QTY
		1 2 3 4	
1	101797701	Battery, 8-Volt PowerDrive (includes item 2)	6
1	101797702	Battery, 8-Volt PowerDrive, Dry (includes item 2)	6
2	101797801	Cap, Battery, 4 Port Gang	1
3	101795701	Wire Assembly, #6 Black	5
4	1014304	Nut, Hex, Stainless Steel, 5/16-18	12
5	1011578	Washer, Flat, Type B Wide, 5/16	8
6	101090801	Hold-Down, Battery, Short	2
7	101090802	Hold-Down, Battery, Long	2
8	101668201	Rod, Battery Hold-Down	8
9	1016859	Kit, Reverse Buzzer (includes items 10 - 13)	1
10	1016851	Buzzer, Reverse	1
11	8056	Screw, Machine, #4-40 x 3/4	2
12	8057	Nut, Hex, #4-40	2
13	8058	Washer, Lock, #4	2
14	1017035	Assembly, Taillight (includes items 15 - 18)	2
15	1017699	Kit, Hardware	1
16	N/A	Base, Taillight	1
17	1011582	Bulb	1
18	1011843	Lens	1
19	1011498	Screw, Machine, #8-32 x 1/2	4
20	1011610	Washer, Lock, #8	4
21	1011571	Nut, Hex, #8-32	4
22	1011557	Screw, Machine, #6-32 x 1	4
23	7591	Washer, Flat, #6	4
24	1011558	Nut, Hex, #6	6
25	1011497	Bezel, Taillight	2
26	1015072	Nut, Nylon Lock, Stainless Steel, 5/16-18	8

ELECTRIC TRANSPORTER 4 AND TRANSPORTER 6 WIRING (CVP)

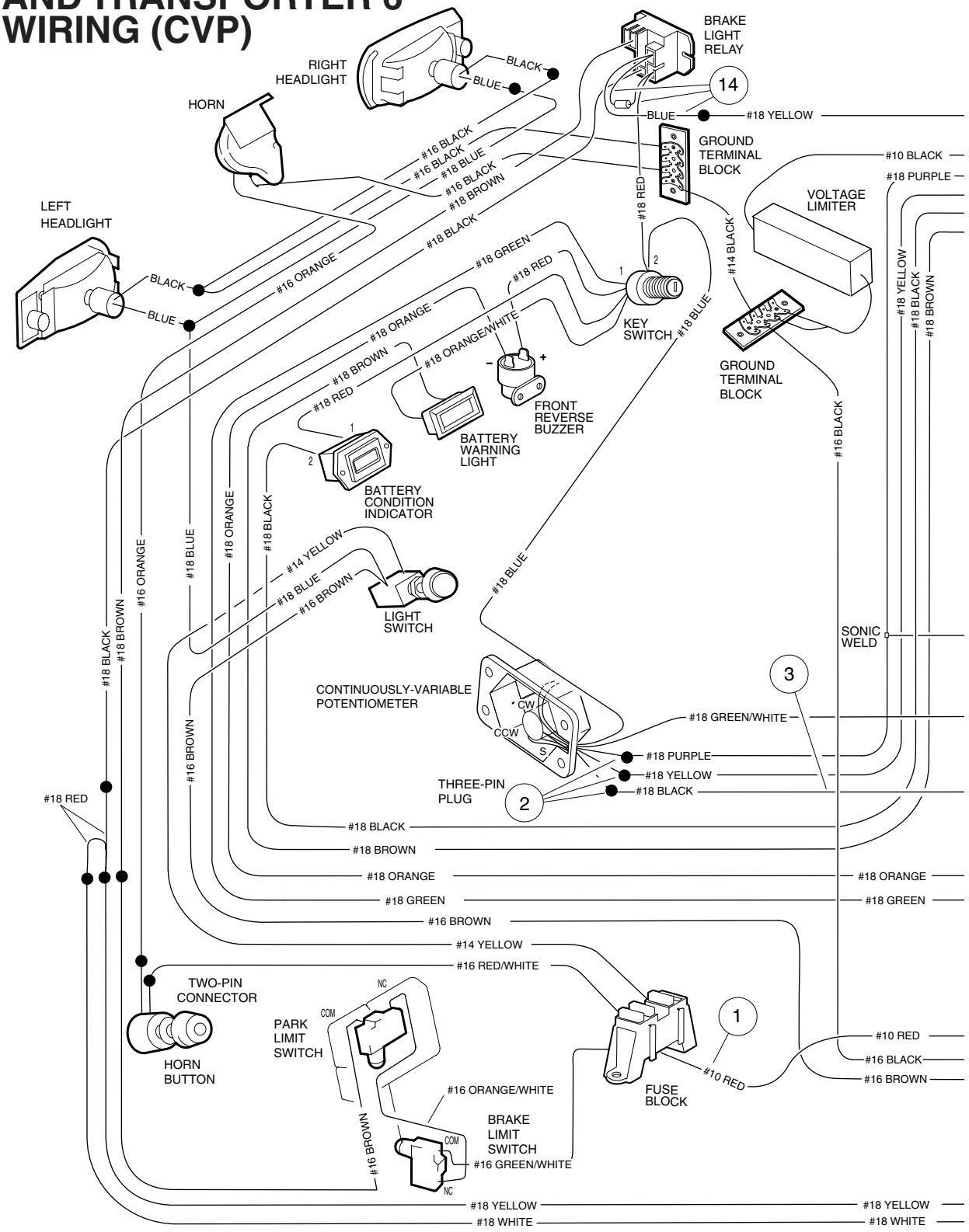

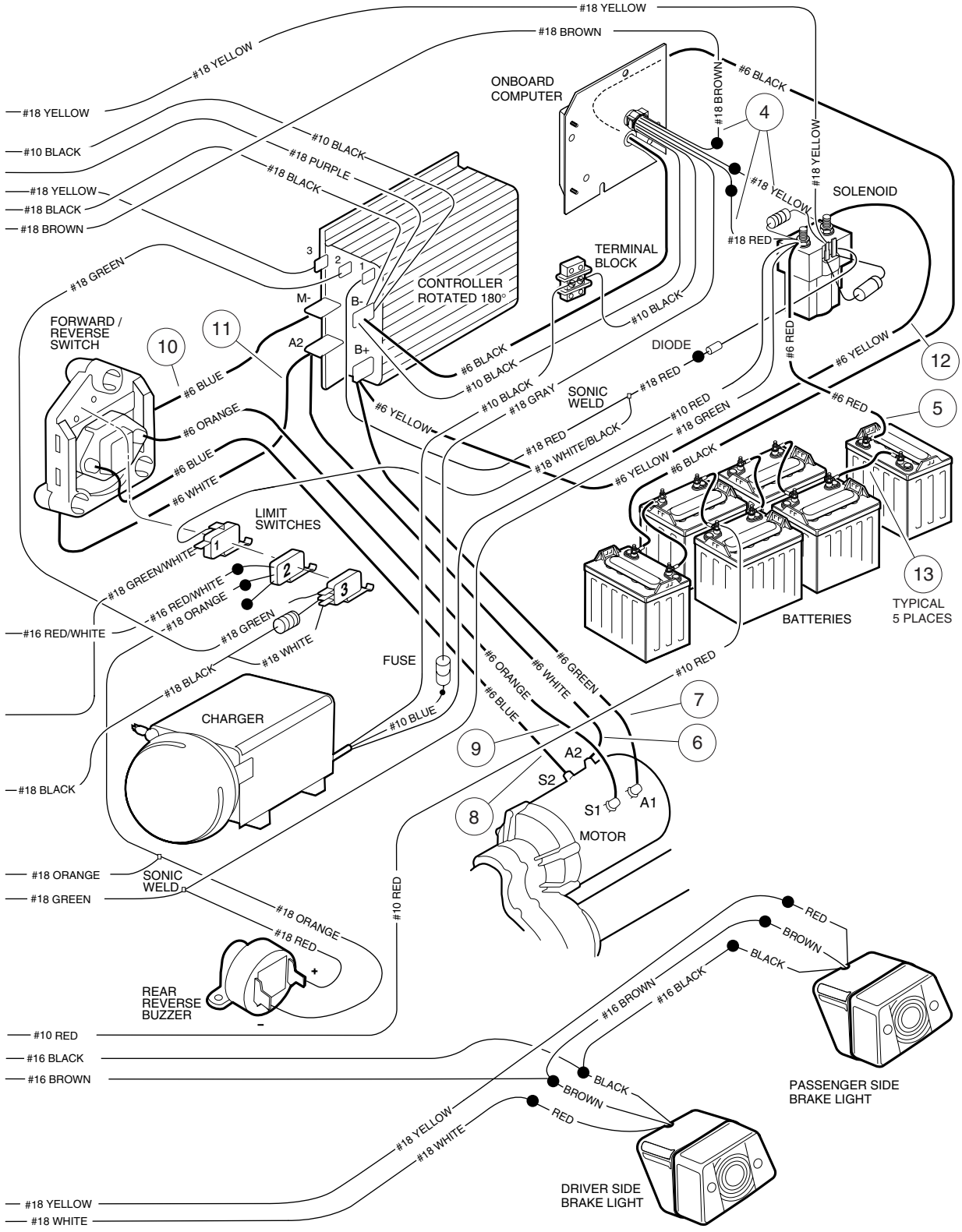
#18 YELLOW
#18 BROWN
#18 YELLOW
#10 BLACK
#18 YELLOW
#18 BLACK
#18 BROWN
#18 GREEN
#10 BLACK
#18 PURPLE
#18 BLACK
ONBOARD COMPUTER
#18 BROWN
#6 BLACK
4
#18 YELLOW
#18 YELLOW
SOLENOID
#18 RED
TERMINAL BLOCK
CONTROLLER ROTATED 180°
3
2
1
M-
B-
B+
A2
FORWARD / REVERSE SWITCH
10
11
#6 BLUE
#6 ORANGE
#6 BLUE
#6 WHITE
#6 BLACK
#10 BLACK
#6 BLACK
#10 BLACK
#18 GRAY
SONIC WELD
#18 RED
DIODE
#6 RED
#6 YELLOW
12
#6 YELLOW
#18 RED
#10 RED
#18 GREEN
#18 WHITE/BLACK
#6 RED
5
#6 YELLOW
#6 BLACK
LIMIT SWITCHES
#18 GREEN/WHITE
#16 RED/WHITE
#18 ORANGE
#18 GREEN
#18 WHITE
#16 RED/WHITE
FUSE
BATTERIES
13
TYPICAL 5 PLACES
#18 BLACK
CHARGER
#10 BLUE
#6 ORANGE
#6 WHITE
#6 GREEN
#10 RED
7
6
9
A2
S2
S1
A1
8
MOTOR
#18 BLACK
#18 ORANGE
SONIC WELD
#18 GREEN
#18 ORANGE
#18 RED
#10 RED
REAR REVERSE BUZZER
RED
BROWN
BLACK
#16 BROWN
#16 BLACK
#10 RED
#16 BLACK
#16 BROWN
BLACK
BROWN
RED
PASSENGER SIDE BRAKE LIGHT
#18 YELLOW
#18 WHITE
DRIVER SIDE BRAKE LIGHT
#18 YELLOW
#18 WHITE

See previous two pages for wiring diagram.

WIRING – TRANSPORTER 4 AND TRANSPORTER 6 WITH CONTINUOUSLY VARIABLE POTENTIOMETER

ITEM	PART NO.	DESCRIPTION	QTY
		1 2 3 4 For TransPorter 4 and TransPorter 6 vehicles with serial numbers prior to 0112-001470.	
	101989901	Wire Harness, Lighting (includes item 1)	1
1	1016698	Wire Assembly, #10 Red	1
	101911601	Wire Harness, Power (includes items 2 - 4)	1
2	101865106	Assembly, 3-Wire Plug (includes item 3)	1
3	101883002	Wire Assembly, #18 Black (includes resistor and #18 white wire)	1
4	101930801	Assembly, 3-Pin Plug	1
5	101904502	Wire Assembly, #6 Red (TransPorter 4 only)	1
5	101904503	Wire Assembly, #6 Red (TransPorter 6 only)	1
6	101908902	Wire Assembly, #6 White (TransPorter 4 only)	1
6	101908903	Wire Assembly, #6 White (TransPorter 6 only)	1
7	101904402	Wire Assembly, #6 Green (TransPorter 4 only)	1
7	101904403	Wire Assembly, #6 Green (TransPorter 6 only)	1
8	101904602	Wire Assembly, #6 Blue (TransPorter 4 only)	1
8	101904603	Wire Assembly, #6 Blue (TransPorter 6 only)	1
9	101904702	Wire Assembly, #6 Orange (TransPorter 4 only)	1
9	101904703	Wire Assembly, #6 Orange (TransPorter 6 only)	1
10	101908801	Wire Assembly, #6 Blue	1
11	1016729	Wire Assembly, #6 White	1
12	1016732	Wire Assembly, #6 Yellow	1
13	101795701	Wire Assembly, #6 Black	5
14	101914401	Assembly, Voltage Suppressor (includes #18 red and #18 blue)	1

ELECTRIC TRANSPORTER 4 AND TRANSPORTER 6 WIRING (MCOR)

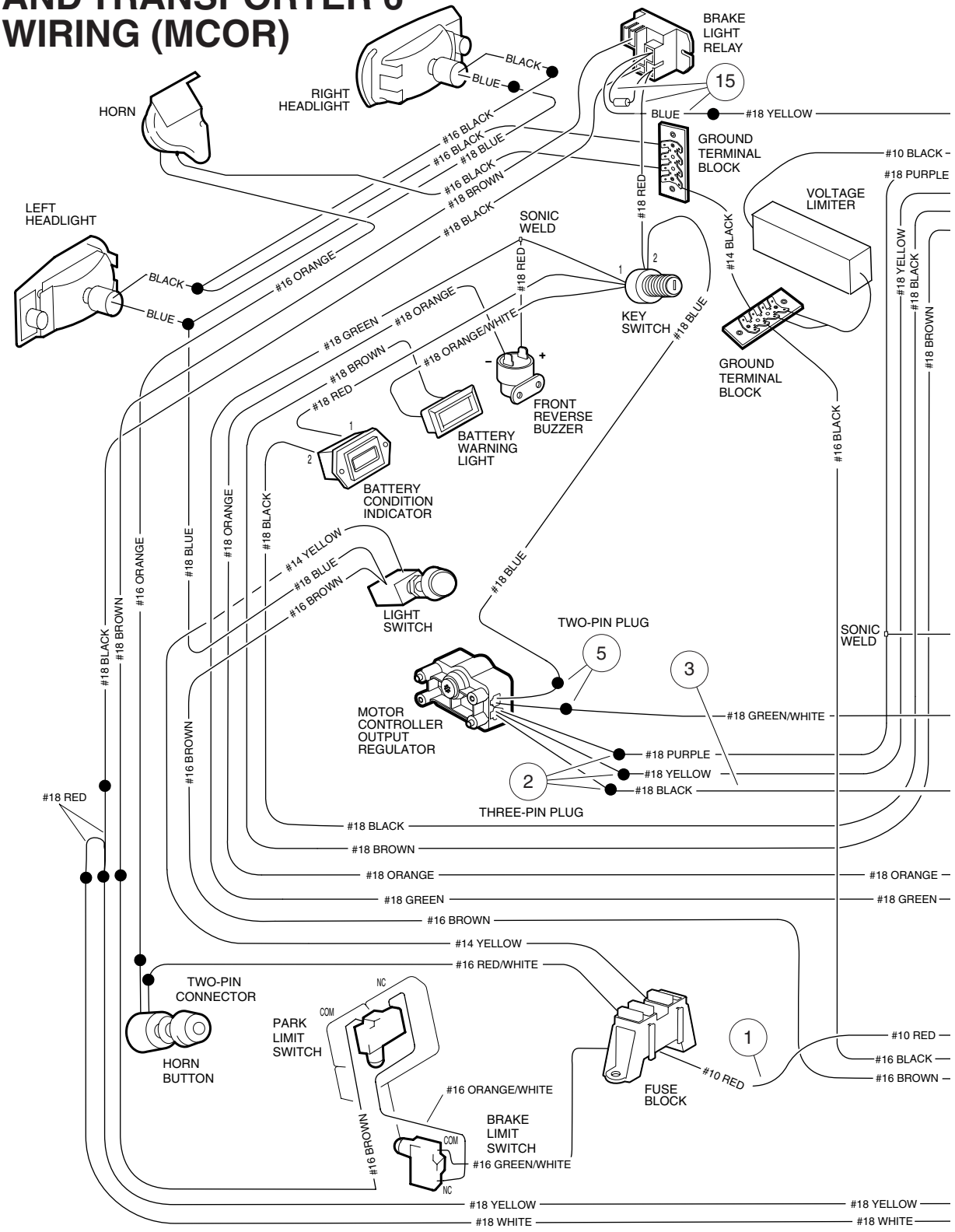

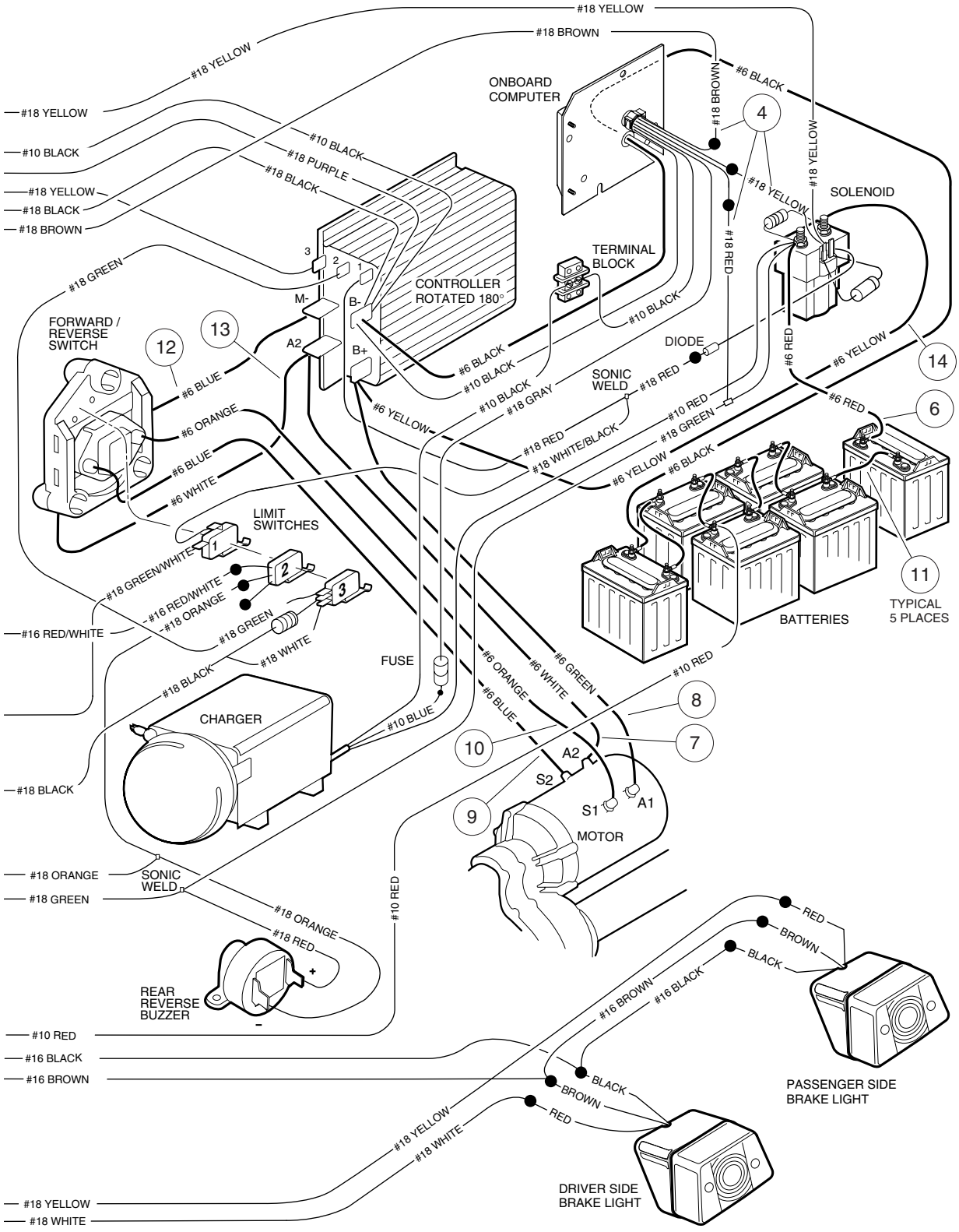
#18 YELLOW
#18 BROWN
#18 YELLOW
#10 BLACK
#18 YELLOW
#18 BLACK
#18 BROWN
#18 GREEN
#10 BLACK
#18 PURPLE
#18 BLACK
ONBOARD COMPUTER
#18 BROWN
#6 BLACK
4
#18 YELLOW
#18 YELLOW
SOLENOID
#18 RED
TERMINAL BLOCK
CONTROLLER ROTATED 180°
M-
B-
A2
B+
3
2
1
#10 BLACK
#6 BLACK
#10 BLACK
#10 BLACK
#18 GRAY
DIODE
SONIC WELD
#18 RED
#6 RED
#6 YELLOW
14
FORWARD / REVERSE SWITCH
12
13
#6 BLUE
#6 ORANGE
#6 BLUE
#6 WHITE
#6 YELLOW
#18 RED
#18 WHITE/BLACK
#10 RED
#18 GREEN
#6 RED
6
#6 YELLOW
#6 BLACK
LIMIT SWITCHES
#18 GREEN/WHITE
#16 RED/WHITE
#18 ORANGE
#18 GREEN
#18 WHITE
#16 RED/WHITE
FUSE
#18 BLACK
#6 ORANGE
#6 WHITE
#6 GREEN
#10 RED
11
TYPICAL 5 PLACES
BATTERIES
CHARGER
#10 BLUE
#6 BLUE
8
10
7
A2
S2
S1
A1
9
MOTOR
#18 BLACK
#18 ORANGE
#18 GREEN
SONIC WELD
#18 ORANGE
#18 RED
#10 RED
REAR REVERSE BUZZER
+
-
#10 RED
#16 BLACK
#16 BROWN
RED
BROWN
BLACK
#16 BROWN
#16 BLACK
PASSENGER SIDE BRAKE LIGHT
BLACK
BROWN
RED
#18 YELLOW
#18 WHITE
DRIVER SIDE BRAKE LIGHT
#18 YELLOW
#18 WHITE

See previous two pages for wiring diagram.

WIRING – TRANSPORTER 4 AND TRANSPORTER 6 WITH MOTOR CONTROLLER OUTPUT REGULATOR (MCOR)

ITEM	PART NO.	DESCRIPTION	QTY
		1 2 3 4 For TransPorter 4 and TransPorter 6 vehicles with serial numbers 0112-001470 and greater.	
	101969301	Wire Harness, Lighting (includes item 1)	1
1	1016698	Wire Assembly, #10 Red	1
	101911601	Wire Harness, Power (includes item 2 - 5)	1
2	101865106	Assembly, 3-Wire Plug (includes item 3)	1
3	101883002	Wire Assembly, #18 Black (includes resistor and #18 white wire)	1
4	101930801	Assembly, 3-Pin Plug	1
5	101936801	Assembly, 2-Pin Plug	1
6	101904502	Wire Assembly, #6 Red (TransPorter 4 only)	1
6	101904503	Wire Assembly, #6 Red (TransPorter 6 only)	1
7	101908902	Wire Assembly, #6 White (TransPorter 4 only)	1
7	101908903	Wire Assembly, #6 White (TransPorter 6 only)	1
8	101904402	Wire Assembly, #6 Green (TransPorter 4 only)	1
8	101904403	Wire Assembly, #6 Green (TransPorter 6 only)	1
9	101904602	Wire Assembly, #6 Blue (TransPorter 4 only)	1
9	101904603	Wire Assembly, #6 Blue (TransPorter 6 only)	1
10	101904702	Wire Assembly, #6 Orange (TransPorter 4 only)	1
10	101904703	Wire Assembly, #6 Orange (TransPorter 6 only)	1
11	101795701	Wire Assembly, #6 Black	5
12	101908801	Wire Assembly, #6 Blue	1
13	1016729	Wire Assembly, #6 White	1
14	1016732	Wire Assembly, #6 Yellow	1
15	101914401	Assembly, Voltage Suppressor (includes #18 red and #18 blue)	1

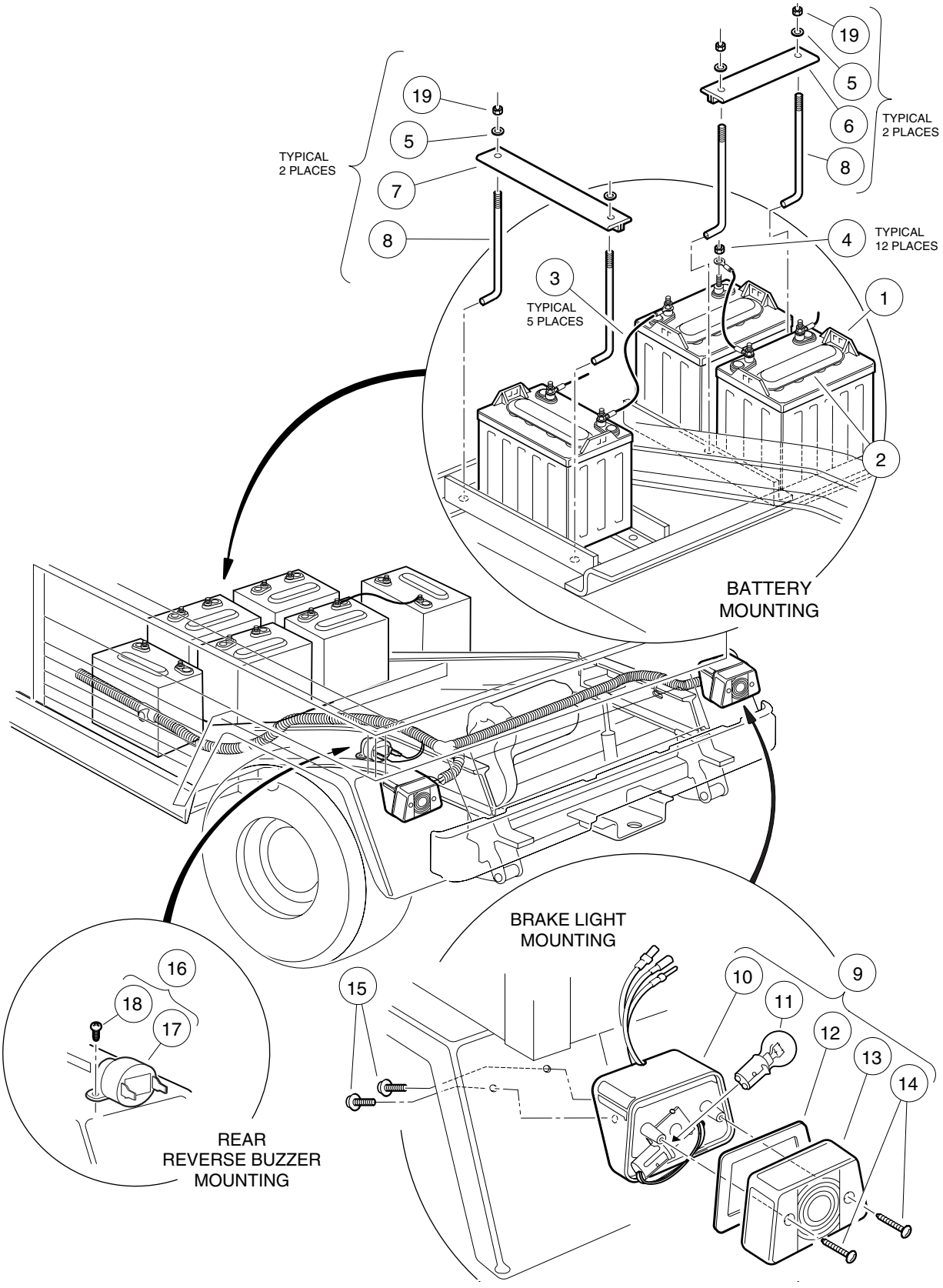
19
5
6
TYPICAL
2 PLACES
8
19
5
TYPICAL
2 PLACES
7
8
4
TYPICAL
12 PLACES
3
TYPICAL
5 PLACES
1
2
BATTERY
MOUNTING
BRAKE LIGHT
MOUNTING
16
18
17
15
10
11
9
12
13
14
REAR
REVERSE BUZZER
MOUNTING

ELECTRICAL COMPONENTS, REAR BODY – TRANSPORTER 4 AND TRANSPORTER 6 VEHICLES

ITEM	PART NO.	DESCRIPTION	QTY
		1 2 3 4	
1	101797701	Battery, 8-Volt PowerDrive (includes item 2)	6
1	101797702	Battery, 8-Volt PowerDrive, Dry (includes item 2)	6
2	101797801	Cap, Battery, 4 Port Gang	6
3	101795701	Wire Assembly, #6 Black	5
4	1014304	Nut, Hex, Stainless Steel, 5/16-18	12
5	1011578	Washer, Flat, Type B Wide, 5/16	8
6	101090801	Hold-Down, Battery, Short	2
7	101090802	Hold-Down, Battery, Long	2
8	101668201	Rod, Battery Hold-Down	8
9	1016717	Assembly, Taillight (includes items 10 - 14)	2
10	N/A	Housing, Taillight	1
11	1011582	Bulb	1
12	N/A	Gasket	1
13	N/A	Lens	1
14	N/A	Screw, Lens	2
15	1015752	Screw, Hi-Lo, #12-16 x 5/8	4
16	1016859	Kit, Reverse Buzzer (includes items 17 and 18)	1
17	1016851	Buzzer, Reverse	1
18	1016849	Screw, Pan-Head Hi-Lo, #4-24 x 5/16	2
19	1015072	Nut, Nylon Lock, Stainless Steel, 5/16-18	8

12

E

ELECTRIC MOTOR

13

E

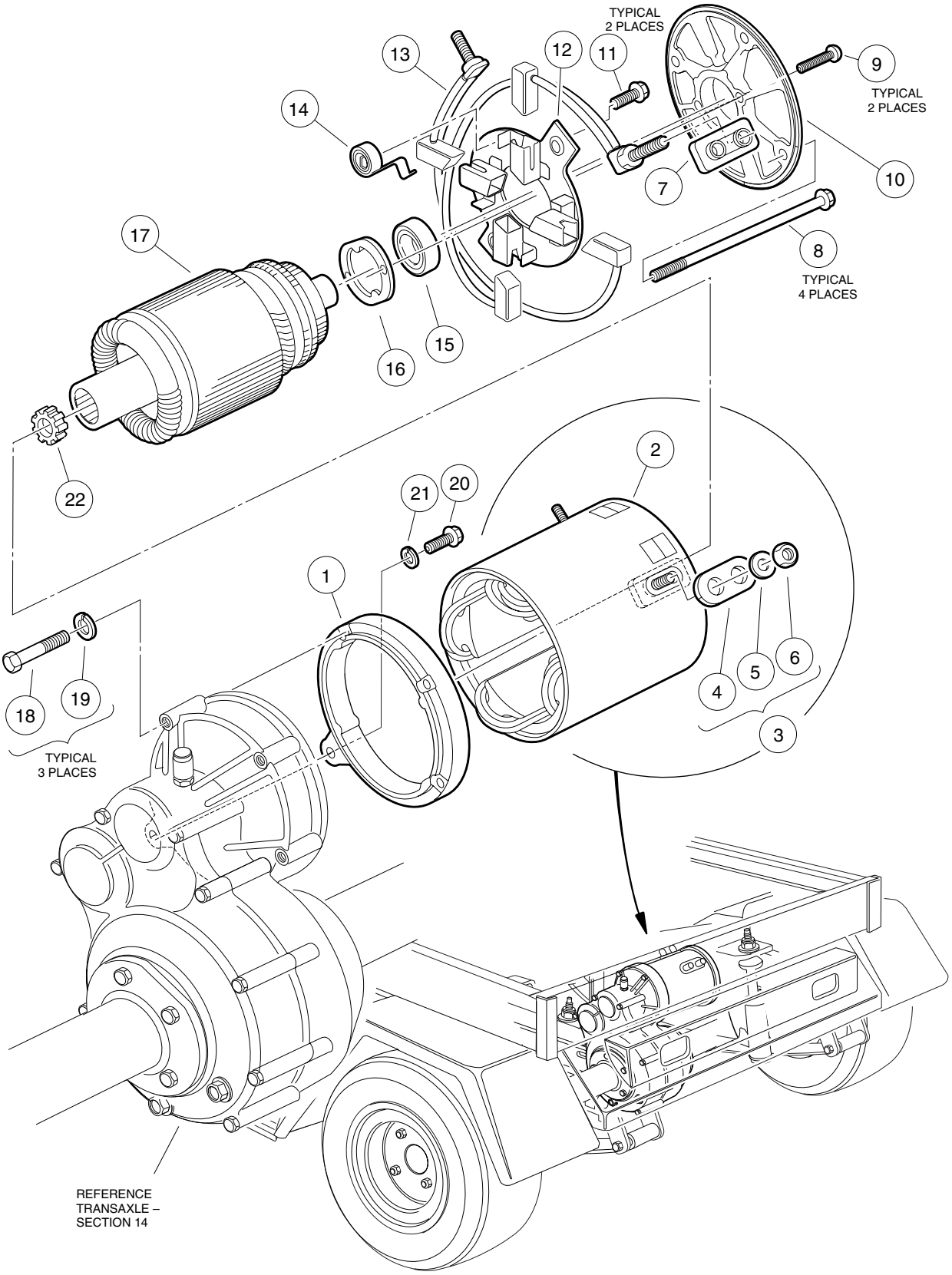
TYPICAL
2 PLACES
13
12
11
9
TYPICAL
2 PLACES
14
10
7
17
8
TYPICAL
4 PLACES
15
16
22
2
21
20
1
18
19
TYPICAL
3 PLACES
4
5
6
3
REFERENCE
TRANSAXLE –
SECTION 14

MOTOR – POWERDRIVE SYSTEM 48 VEHICLE

ITEM	PART NO.	DESCRIPTION	QTY
		1 2 3 4	
	102237701	Assembly, 48-Volt Motor, 3.10-hp (includes items 1 - 17)	1
1	1017944	Shield, End	1
2	1017958	Assembly, Stator Shell and Winding	1
3	1017947	Package, Hardware (includes items 4 - 7)	1
4	N/A	Bushing, Insulator	2
5	N/A	Washer, Flat, 5/16	4
6	N/A	Nut, Hex, 5/16-18	4
7	N/A	Bushing, Insulator	2
8	1017961	Screw, Clamp	4
9	1017953	Screw, Bearing Retainer	2
10	1017951	Shield, End	1
11	1017949	Screw, Brush Holder	2
12	1017948	Rigging, Brush	1
13	1017946	Package, Brush (2 pieces) (includes 4 brushes)	1
14	1011411	Package, Brush Spring (4 pieces)	1
15	1011290	Bearing, Ball	1
16	1017950	Retainer, Bearing	1
17	N/A	Armature	1
18	1014201	Screw, Hex-Head Cap, 1/4-20 x 2-1/4	3
19	451	Washer, Lock, 1/4	3
20	1010934	Screw, Hex-Head Cap, 5/16-18 x 1	1
21	7174	Washer, Lock, 5/16	1
22	102235201	Bumper, Motor	1

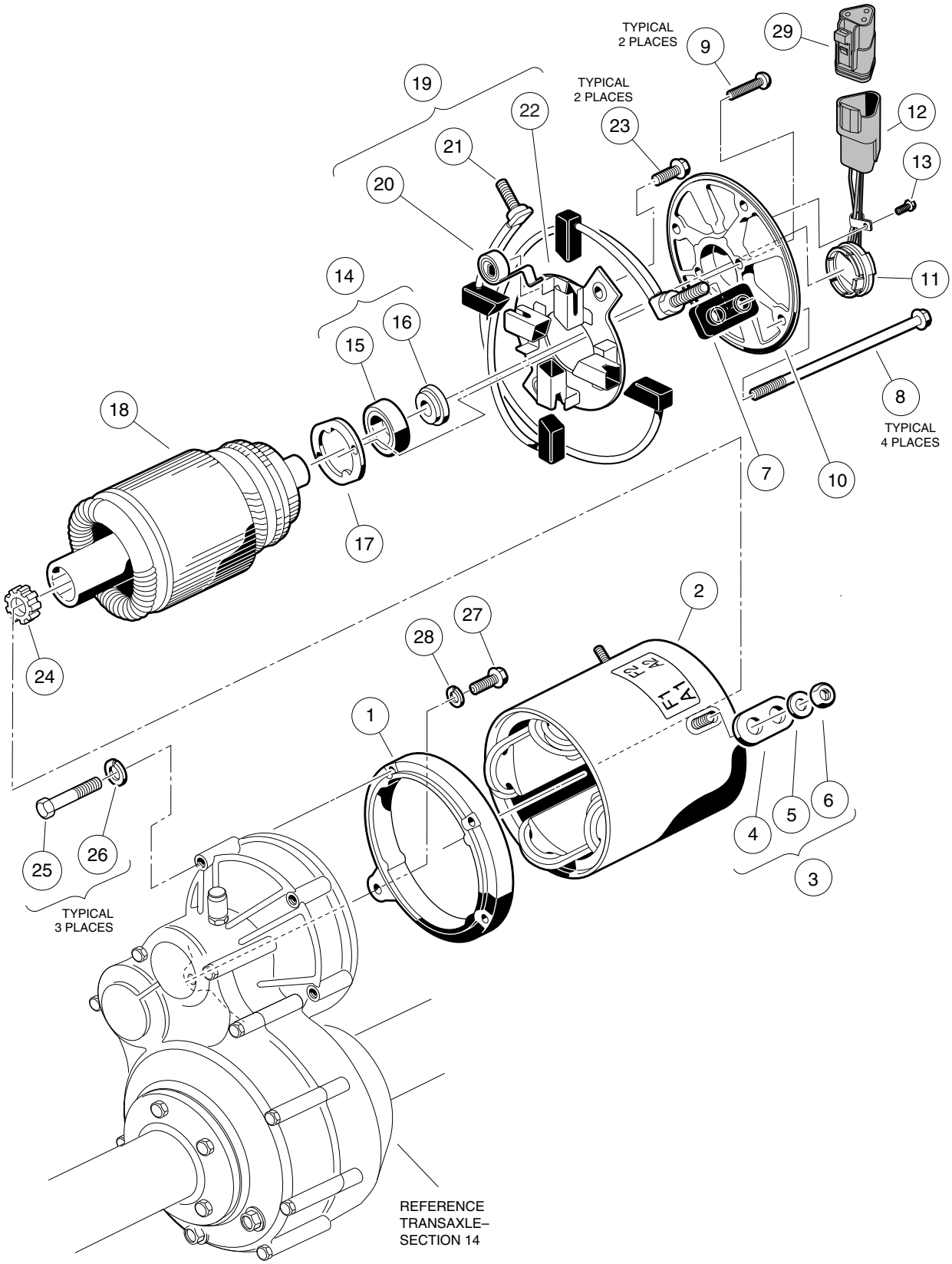
TYPICAL
2 PLACES
9
29
19
TYPICAL
2 PLACES
22
23
12
21
13
20
14
11
16
15
8
TYPICAL
4 PLACES
18
7
10
17
2
27
28
24
1
4
5
6
25
26
3
TYPICAL
3 PLACES
REFERENCE
TRANSAXLE–
SECTION 14

ITEM	PART NO.	DESCRIPTION	QTY
		1 2 3 4	
	102240102	Assembly, 48-Volt IQ Motor, 3.20-hp (includes items 1 - 23)	1
1	1017944	Shield, End	1
2	102265501	Assembly, Stator Shell and Winding	1
3	1017947	Package, Hardware (includes items 4 - 7)	1
4	N/A	Bushing, Insulator	2
5	N/A	Washer, Flat, 5/16	4
6	N/A	Nut, Hex, 5/16-18	4
7	N/A	Bushing, Insulator	2
8	102266101	Screw, Clamp, #10-32 x 8-1/4	4
9	1017953	Screw, Bearing Retainer, #8-32 x 7/8	2
	102265901	Assembly, End Shield (includes items 10 - 13)	1
10	102266001	Shield, End	1
11	102265601	Sensor, Motor Speed (includes item 12)	1
12	101942301	Housing, Female 3-Wire, Gray	1
13	102267001	Screw, Steel Hex, Thread-Rolling, #8 x 3/8	1
14	102265701	Kit, Bearing and Magnet (includes items 15 and 16)	1
15	N/A	Bearing, Ball	1
16	N/A	Magnet	1
17	1017950	Retainer, Bearing	1
18	N/A	Armature	1
19	102327801	Assembly, Brush Rigging (includes items 20 - 22)	1
20	1011411	Package, Brush Spring (4 pieces)	1
21	102251901	Package, Brush (2 pieces) (includes 4 brushes)	1
22	1017948	Rigging, Brush	1
23	1017949	Screw, Brush Holder, #6-32 x 1/2	2
24	102235201	Bumper, Motor	1
25	1014201	Screw, Hex-Head Cap, 1/4-20 x 2-1/4	3
26	451	Washer, Lock, 1/4	3
27	1010934	Screw, Hex-Head Cap, 5/16-18 x 1	1
28	7174	Washer, Lock, 5/16	1
29	101920101	Kit, 3-Pin Plug Assembly, Gray	1

13

E

TRANSAXLE – ELECTRIC VEHICLE

14

E

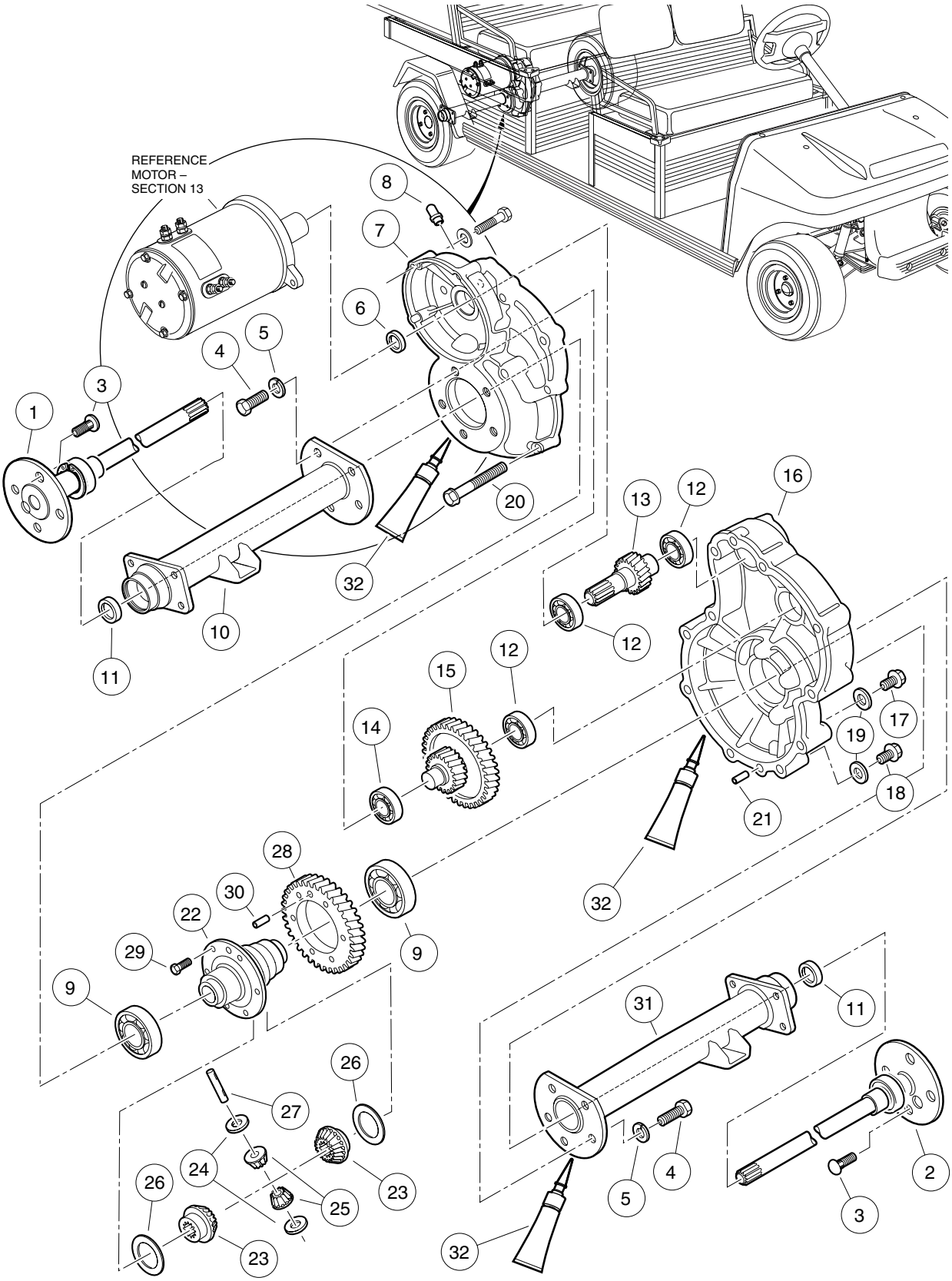
REFERENCE
MOTOR –
SECTION 13
1
2
3
4
5
6
7
8
9
10
11
12
13
14
15
16
17
18
19
20
21
22
23
24
25
26
27
28
29
30
31
32

TRANSAXLE, TYPE G – ELECTRIC VEHICLE

ITEM	PART NO.	DESCRIPTION	QTY
		1 2 3 4	
	101896001	Transaxle, Type G (includes items 1 - 32)	1
1	101895801	Axle Assembly, Passenger-Side (includes item 3)	1
2	101895901	Axle Assembly, Driver-Side (includes item 3)	1
3	101922201	Stud, Lug	4
4	101976001	Bolt, M10 x 1.5 x 35 mm	10
5	101897901	Washer, Lock	10
6	101923501	Seal, Oil, Input Shaft	1
7	101895501	Gear Case, Passenge-Side	1
8	101897201	Breather	1
9	7330	Bearing, Differential	2
10	101895601	Assembly, Axle Tube, Passenger-Side	1
11	1013794	Seal, Oil, Axle Shaft	2
12	7335	Bearing, Input Gear	3
13	101923701	Shaft, Input	1
14	7336	Bearing, Intermediate Gear	1
15	101906901	Assembly, Intermediate Gear	1
16	101895401	Gear Case, Driver-Side	1
17	101972201	Plug, Fill	1
18	101972101	Plug, Magnetic	1
19	101923201	Gasket, Plug	2
20	101897001	Bolt, M8 x 1.25 x 60 mm	11
21	101897601	Pin, Dowel	2
22	101923601	Housing, Differential	1
23	101923901	Gear, Differential	2
24	101903601	Plate, Thrust (idler gear)	2
25	101923001	Gear, Differential Idler	2
26	101903701	Plate, Thrust	2
27	101922101	Pin, Differential	1
28	101906201	Gear, Output	1
29	101897401	Bolt, M10 x 1.5 x 25 mm	4
30	101972401	Pin, Dowel	1
31	101895701	Assembly, Axle Tube, Driver-Side	1
32	101928701	Gasket, Liquid, 8.8 oz. (250 g)	A/R

14

E

BATTERY CHARGER

15

E

15

E

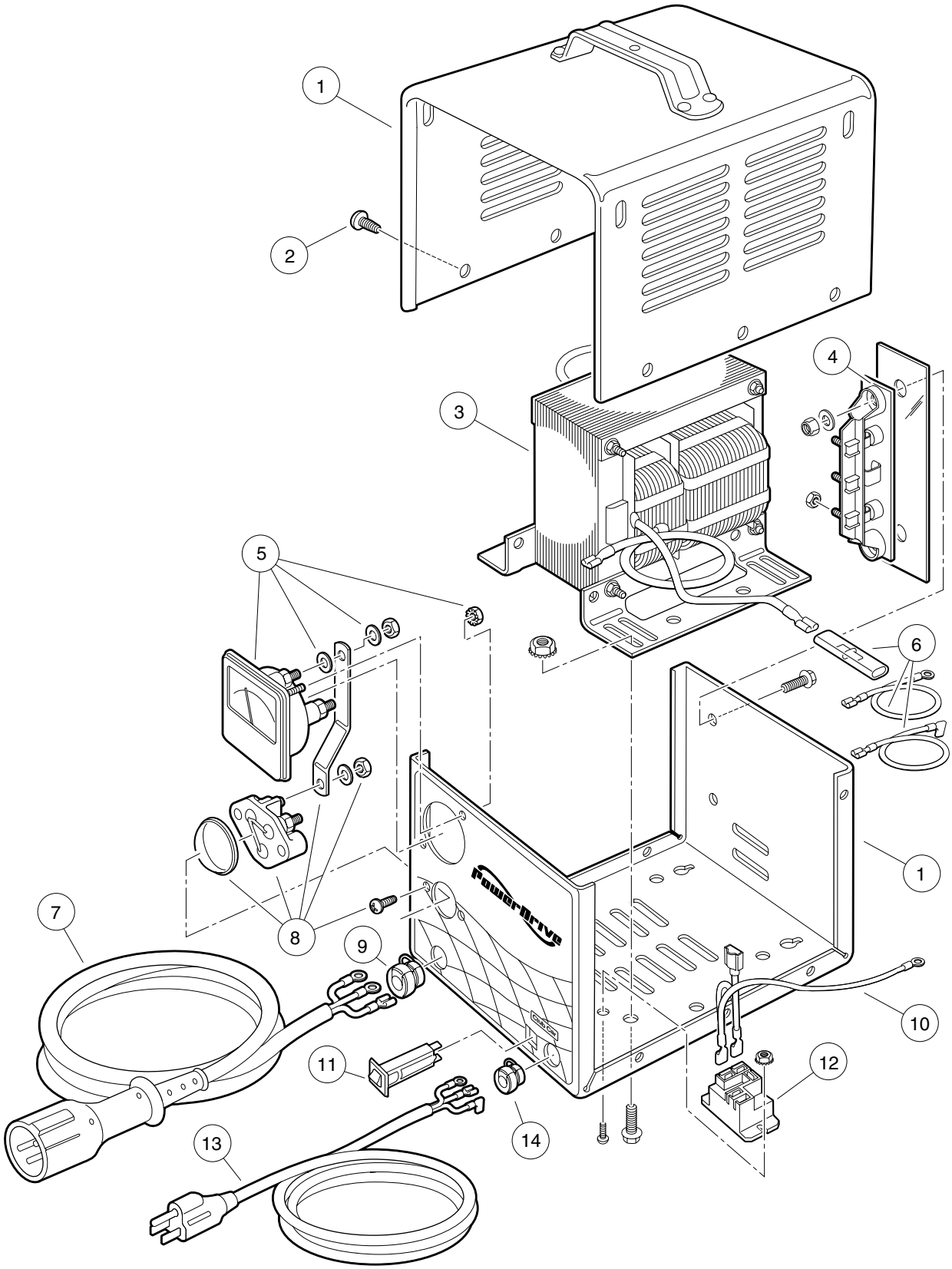

POWERDRIVE BATTERY CHARGER, DOMESTIC – VILLAGER 4, VILLAGER 6, AND VILLAGER 8

ITEM	PART NO.	DESCRIPTION	QTY
		1 2 3 4	
	101802201	Charger, Battery, PowerDrive, Domestic 120-V AC 48-V DC 60-Hz (model number 17930-11) (includes items 1 - 14) 103-inch DC cord with male 3-pin plug, 12-AWG 74-inch AC cord with male grounded plug	1
	101802202	Charger, Battery, PowerDrive 120-V AC 48-V DC 60-Hz (model number 17930-18) (includes items 1 - 14) 144-inch DC cord with male 3-pin plug, 12-AWG 108-inch AC cord with male grounded plug	1
	101802203	Charger, Battery, PowerDrive 120-V AC 48-V DC 60-Hz (model number 17930-19) (includes items 1 - 14) 240-inch DC cord with male 3-pin plug, 12-AWG 108-inch AC cord with male grounded plug	1
1	101828301	Assembly, Case (includes fasteners)	1
2	7577	Screw, Pan-Head, Self-Tapping, #10-16 x 1/2	10
3	101819701	Assembly, Transformer	1
4	1015914	Assembly, Heatsink, with Diodes (includes mounting hardware)	1
5	101828501	Ammeter (includes mounting hardware)	1
6	101831101	Kit, Wire Assembly	1
7	101828901	Cordset, DC, 113-Inch Long with Male 3-Pin Plug, 12-AWG	1
7	101828902	Cordset, DC, 154-Inch Long with Male 3-Pin Plug, 12-AWG	1
7	101828903	Cordset, DC, 250-Inch Long with Male 3-Pin Plug, 12-AWG	1
8	1012101	Assembly, Fuse (includes mounting hardware)	1
9	1012098	Bushing, Strain Relief, DC Cord, 12-AWG	1
10	101914401	Assembly, AC Voltage Suppressor	1
11	CCX8506	Breaker, Circuit, 15-Amp, 120-V AC	1
12	101828601	Relay, Power, 48-V DC	1
13	101828801	Cordset, AC, 80-Inch Long	1
13	101828802	Cordset, AC, 116-Inch Long	1
14	1015917	Bushing, Strain Relief, AC Cord	1

15

E

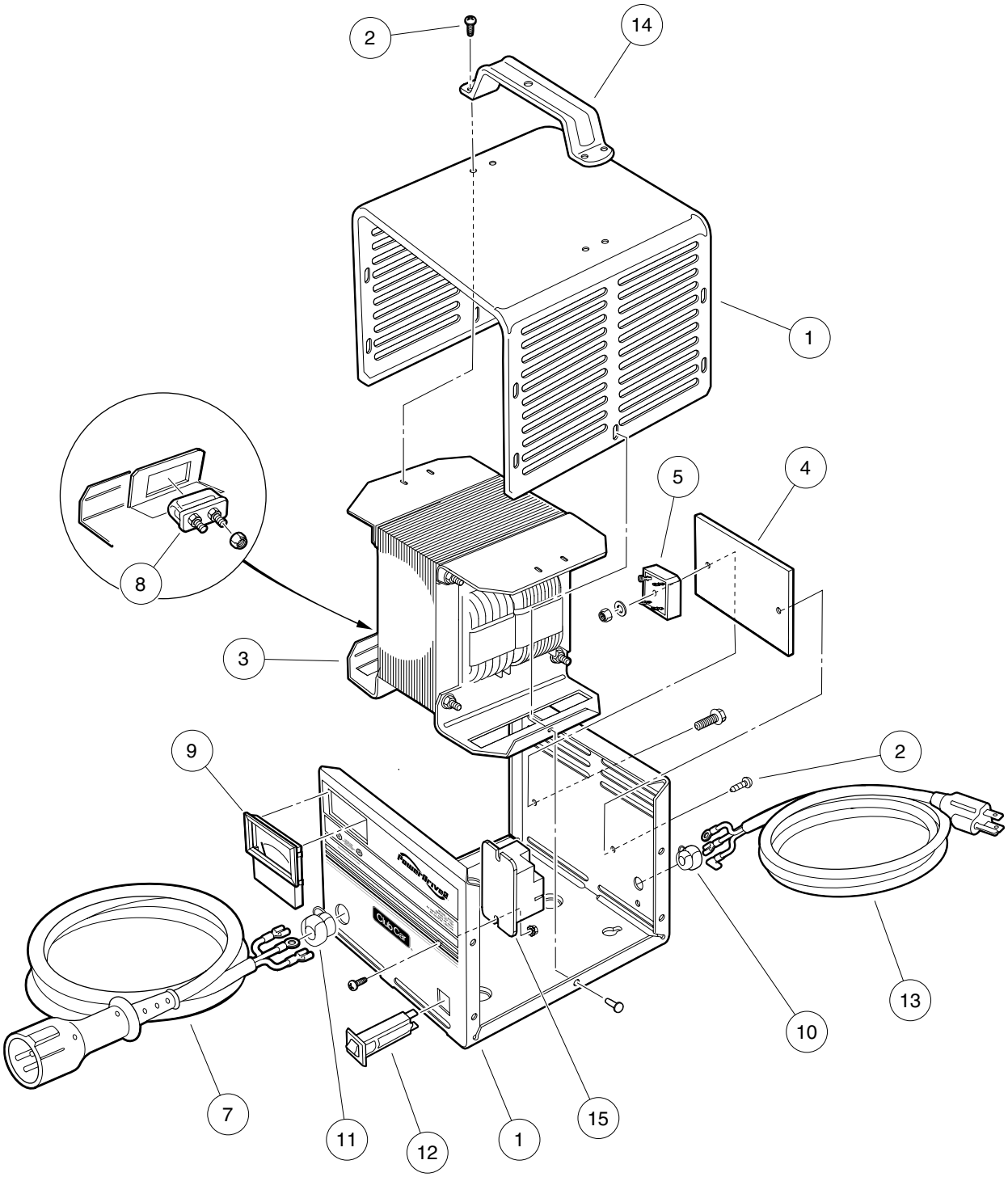

POWERDRIVE 2 CHARGER, DOMESTIC – VILLAGER 4

ITEM	PART NO.	DESCRIPTION	QTY
		1 2 3 4	
	101802204	Charger, Battery, PowerDrive, Domestic 120-V AC 48-V DC 60-Hz (model number 22110-11) (includes items 1 - 15) 103-inch DC cord with male 3-pin plug, 12-AWG 74-inch AC cord with male grounded plug	1
	101802205	Charger, Battery, PowerDrive 120-V AC 48-V DC 60-Hz (model number 22110-18) (includes items 1 - 15) 144-inch DC cord with male 3-pin plug, 12-AWG 108-inch AC cord with male grounded plug	1
	101802206	Charger, Battery, PowerDrive 120-V AC 48-V DC 60-Hz (model number 22110-19) (includes items 1 - 15) 240-inch DC cord with male 3-pin plug, 12-AWG 108-inch AC cord with male grounded plug	1
1	102273201	Assembly, Case (includes item 2)	1
2	7577	Screw, Pan-Head, Self-Tapping, #10-16 x 1/2	12
3	102273301	Assembly, Transformer (includes rivets)	1
4	102273401	Plate, Heatsink	1
5	102273501	Assembly, Diode with Heatsink Film (includes mounting hardware)	1
6	102273601	Kit, Wire Assembly (not shown)	1
7	101828904	Cordset, DC, 113-Inch Long with Male 3-Pin Plug, 12-AWG	1
7	101828905	Cordset, DC, 154-Inch Long with Male 3-Pin Plug, 12-AWG	1
7	101828906	Cordset, DC, 250-Inch Long with Male 3-Pin Plug, 12-AWG	1
8	102273701	Assembly, Fuse, 30-Amp (includes terminal hardware)	1
9	102273801	Ammeter (includes mounting hardware)	1
10	102273901	Bushing, Strain Relief, AC Cord	1
11	1012098	Bushing, Strain Relief, DC Cord, 12-AWG	1
12	CCX8506	Breaker, Circuit, 15-Amp, 120-V AC	1
13	101828801	Cordset, AC, 80-Inch Long	1
13	101828802	Cordset, AC, 116-Inch Long	1
14	102274001	Handle, PowerDrive 2 Charger (with four screws)	1
15	101828601	Relay, Power, 48-V DC	1

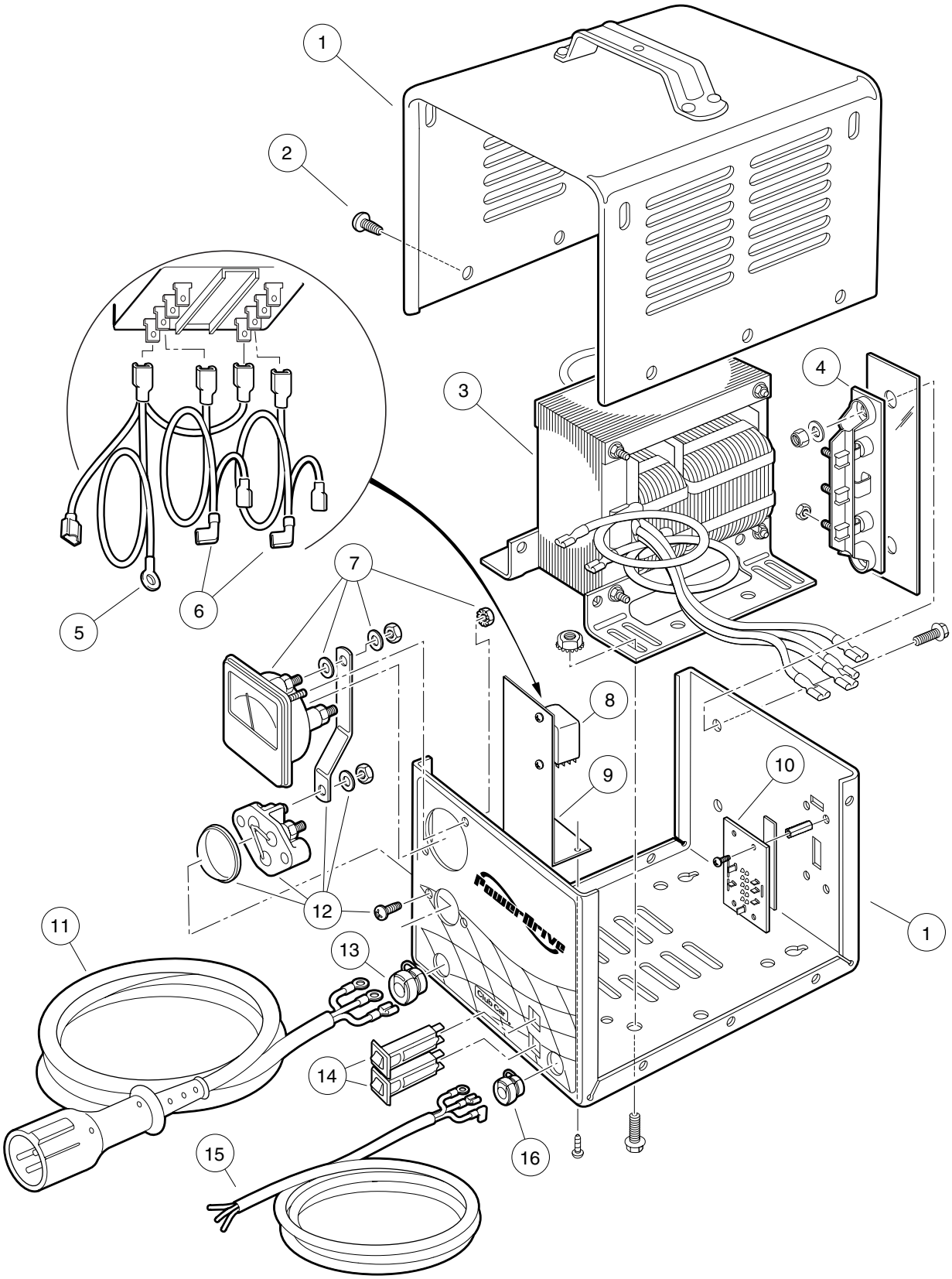
1
2
3
4
5
6
7
8
9
10
11
12
13
14
15
16
Power-Drive
Club Car

POWERDRIVE BATTERY CHARGER, EXPORT – VILLAGER 4, VILLAGER 6, AND VILLAGER 8

ITEM	PART NO.	DESCRIPTION	QTY
		1 2 3 4	
	101831503	Charger, Battery, PowerDrive, Export with 4-Position Switch 100 - 200 - 220 - 240 V AC, 48-V DC 50/60-Hz (model number 18780-11) (includes items 1 - 16) 103-inch DC cord with male 3-pin plug, 12-AWG 74-inch AC cord with no plug	1
	101831504	Charger, Battery, PowerDrive Export with 4-Position Switch 100 - 200 - 220 - 240 V AC, 48-V DC 50/60-Hz (model number 18780-18) (includes items 1 - 16) 144-inch DC cord with male 3-pin plug, 12-AWG 108-inch AC cord with no plug	1
1	N/A	Assembly, Case	1
2	7577	Screw, Pan-Head, Self-Tapping, #10-16 x 1/2	10
3	101838201	Assembly, Transformer	1
4	1015914	Assembly, Heatsink, with Diodes (includes mounting hardware)	1
5	101914401	Assembly, AC Voltage Suppressor	1
6	101838501	Kit, Wire Assembly	1
7	101828501	Ammeter (includes hardware)	1
8	101838301	Relay, Power, 48-V DC (includes mounting hardware)	1
9	101838701	Bracket, Power Relay Mounting	1
10	101838601	Switch, 4-Position Slide	1
11	101828901	Cordset, DC, 113-Inch Long with Male 3-Pin Plug, 12-AWG	1
11	101828902	Cordset, DC, 154-Inch Long with Male 3-Pin Plug, 12-AWG	1
11	101828903	Cordset, DC, 250-Inch Long with Male 3-Pin Plug, 12-AWG	1
12	1012101	Assembly, Fuse (includes hardware)	1
13	1012098	Bushing, Strain Relief, DC Cord, 12-AWG	1
14	101838401	Breaker, Circuit, 10-Amp	2
15	101831701	Cordset, AC, 80-Inch Long with Leads (no plug)	1
15	101831702	Cordset, AC, 116-Inch Long with Leads (no plug)	1
16	1015917	Bushing, Strain Relief, AC Cord	1

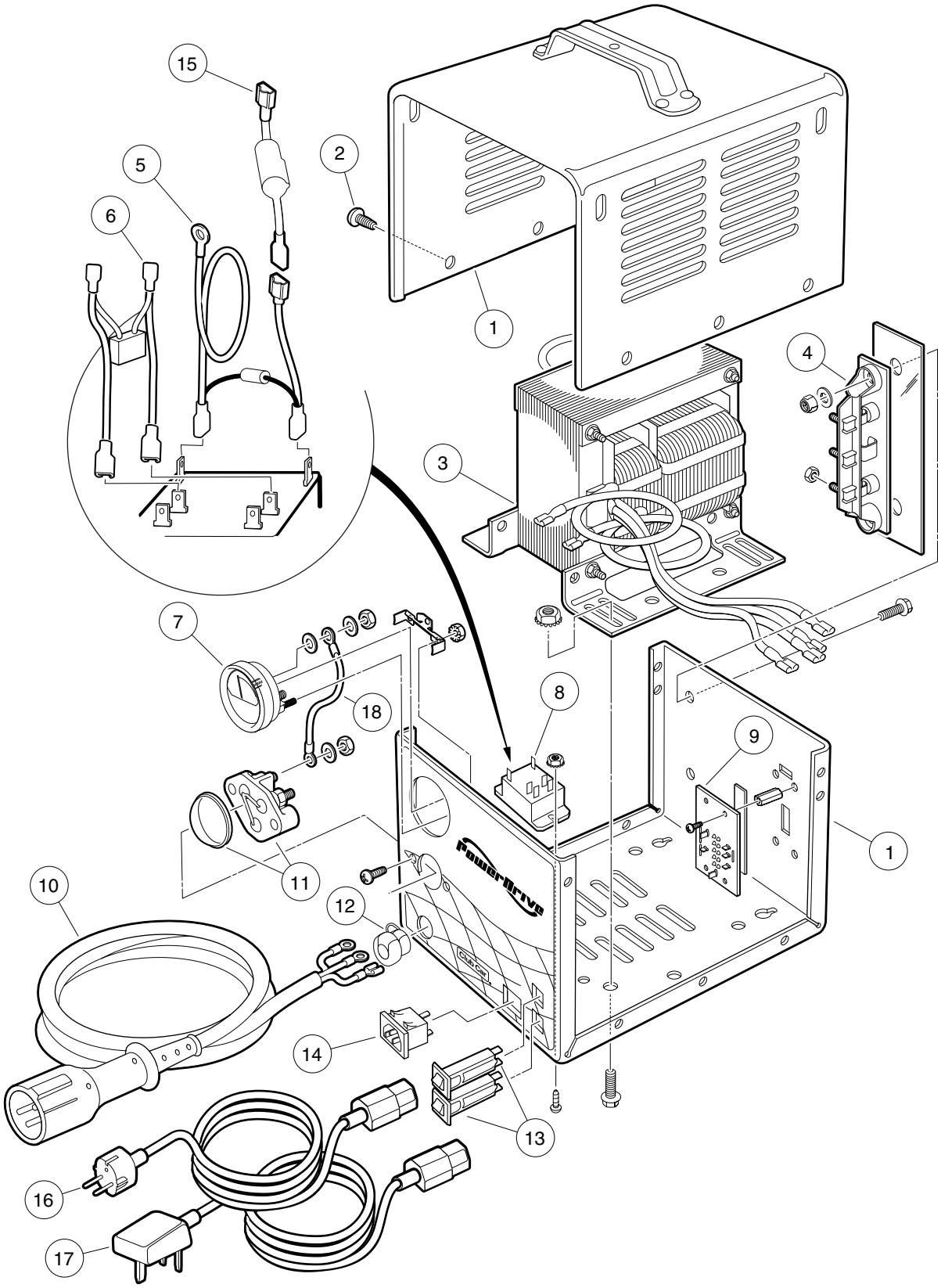
15
2
5
6
1
4
3
7
18
8
9
1
11
10
12
14
13
16
17

POWERDRIVE BATTERY CHARGER, EUROPEAN – VILLAGER 4, VILLAGER 6, AND VILLAGER 8

ITEM	PART NO.	DESCRIPTION	QTY
		1 2 3 4	
	101956201	Charger, Battery, PowerDrive, European with 4-Position Switch 100 - 200 - 220 - 240 V AC, 48-V DC 50/60-Hz (model number 20300) (includes items 1 - 15) 103-inch (261 cm) DC cord with male 3-pin plug, 12-AWG	1
	101956202	Charger, Battery, PowerDrive European with 4-Position Switch 100 - 200 - 220 - 240 V AC, 48-V DC 50/60-Hz (model number 20310) (includes items 1 - 15) 144-inch (366 cm) DC cord with male 3-pin plug, 12-AWG	1
1	N/A	Assembly, Case	1
2	7577	Screw, Pan-Head, Self-Tapping, #10-16 x 1/2	10
3	****	Assembly, Transformer	1
4	1015914	Assembly, Heatsink, with Diodes (includes mounting hardware)	1
5	****	Assembly, AC Voltage Suppressor	1
6	****	Kit, Wire Assembly	1
7	101976601	Ammeter (includes hardware)	1
8	101987501	Relay, Power, 48-V DC (includes mounting hardware)	1
9	101838601	Switch, 4-Position Slide	1
10	101828901	Cordset, DC, 103-Inch (261 cm) Long with Male 3-Pin Plug, 12-AWG	1
10	101828902	Cordset, DC, 144-Inch (366 cm) Long with Male 3-Pin Plug, 12-AWG	1
11	1012101	Assembly, Fuse (includes hardware)	1
12	1012098	Bushing, Strain Relief, DC Cord, 12-AWG	1
13	101838401	Breaker, Circuit, 10-Amp	2
14	101973501	Receptacle, AC Cord	1
15	****	Assembly, Current Limiter	1
16	101958301	Cordset, AC, Continental Europe, 96-Inch (244 cm) Long (with male 2-pin plug)	1
17	101958201	Cordset, AC, U.K., 96-Inch (244 cm) Long (with male 3-pin plug)	1
18	N/A	Wire, Jumper	1
	****	Special order item available on request	

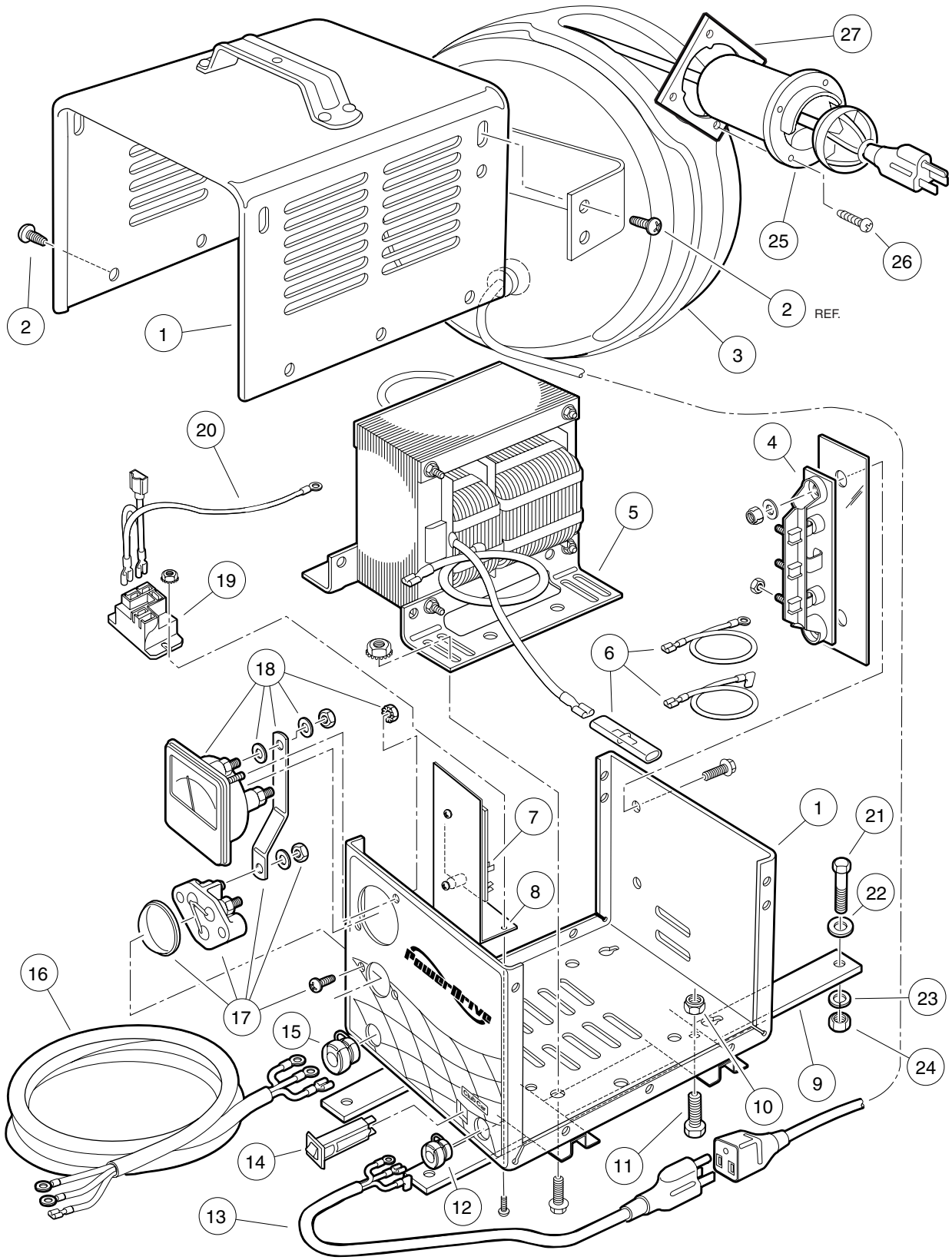
27
25
26
2
REF.
2
1
3
20
4
5
19
6
18
7
1
21
8
22
16
17
15
23
24
9
10
14
11
12
13

ONBOARD POWERDRIVE BATTERY CHARGER, DOMESTIC – TRANSPORTER 4 AND TRANSPORTER 6

ITEM	PART NO.	DESCRIPTION	QTY
		1 2 3 4	
	101814301	Assembly, PowerDrive Battery Charger with Reel, Onboard 120 V AC 48 V DC 60 Hz (includes items 1 - 20)	1
	101802301	Assembly, PowerDrive Battery Charger, Onboard 120 V AC 48 V DC 60 Hz (includes items 1 - 2 and 4 - 20)	1
1	****	Assembly, Case	1
2	7577	Screw, Pan-Head, Self-Tapping, #10-16 x 1/2	12
3	1017187	Assembly, Retractable Cord Reel	1
4	1015914	Assembly, Heatsink, with Diodes (includes hardware)	1
5	101819701	Assembly, Transformer	1
6	101841701	Kit, Wire Assembly	1
7	101841901	Board, Control	1
8	101838701	Bracket, Relay and Reset Board Mounting	1
9	1011707	Bracket, Mounting	2
10	8233	Nut, Lock, 1/4-20	4
11	7847	Screw, Hex-Head Cap, 1/4-20 x 3/4	4
12	1015917	Bushing, Strain Relief, AC Cord	1
13	101829001	Cordset, AC, 24 Inches Long, with Grounded Plug	1
14	CCX8506	Breaker, Circuit, 15-Amp, 120-V AC	1
15	1012098	Bushing, Strain Relief, DC Cord, 12 AWG	1
16	101829101	Cordset, DC, 90 Inches Long, with Leads, 12 AWG	1
17	1012101	Assembly, Fuse (includes hardware)	1
18	101828501	Ammeter (includes hardware)	1
19	101828601	Relay, Power, 48 VDC	1
20	101914401	Assembly, AC Voltage Suppressor	1
21	7479	Screw, Hex-Head Cap, 1/4-20 x 1-1/4	4
22	1014306	Washer, Flat, 1/4	4
23	451	Washer, Lock, 1/4	4
24	1028	Nut, Hex, 1/4-20	4
25	1016673	Housing, Cord	1
26	8796	Screw, Phillips-Head, #7-19 x 3/4	4
27	101801001	Plate, Receptacle Backing	1
	1017189	Shrink, Heat (1-1/2 inch x 4 feet) (not shown)*	A/R

*Heat shrink is available in 3-inch lengths, nonstandard.

**** Special order item available upon request.

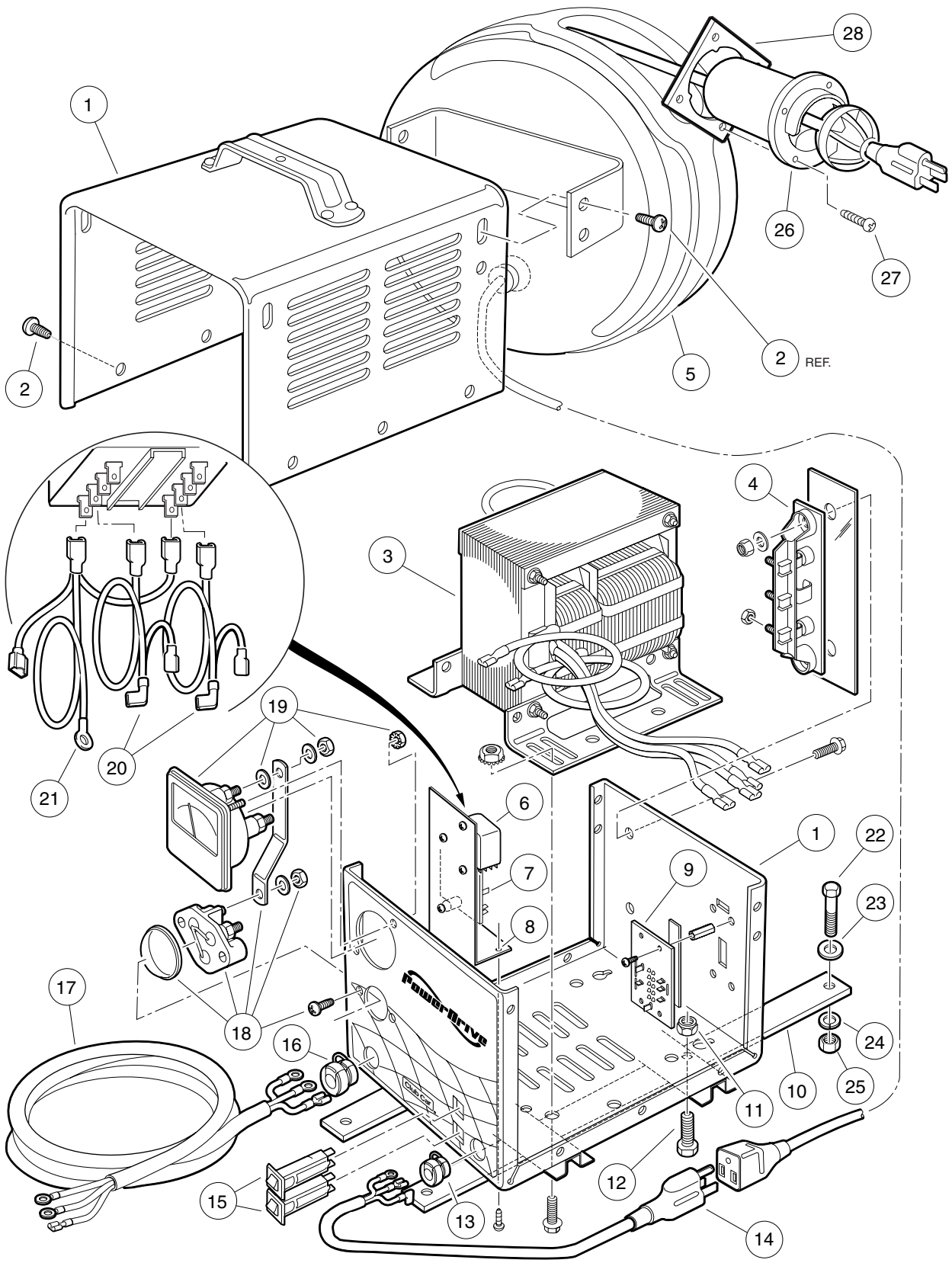
28
1
26
27
2
2 REF.
5
4
3
19
20
21
6
7
8
1
22
9
23
17
18
16
24
25
10
11
12
15
13
14

ONBOARD POWERDRIVE BATTERY CHARGER, EXPORT – TRANSPORTER 4 AND TRANSPORTER 6

ITEM	PART NO.	DESCRIPTION	QTY
		1 2 3 4	
	101814302	Assembly, PowerDrive Battery Charger and Reel, Onboard with 4-Position Switch, 100 - 200 - 220 - 240 V AC, 48 V DC 50/60 Hz (includes items 1 - 21)	1
	101831601	Assembly, PowerDrive Battery Charger, Onboard with 4-Position Switch, 100 - 200 - 220 - 240 V AC, 48 V DC 50/60 Hz (includes items 1 - 4 and 6 - 21)	1
1	****	Assembly, Case (includes fasteners)	1
2	7577	Screw, Pan-Head, Self-Tapping, #10-16 x 1/2	12
3	101838201	Assembly, Transformer	1
4	1015914	Assembly, Heatsink, with Diodes (includes mounting hardware)	1
5	1017187	Assembly, Retractable Cord Reel	1
6	101838301	Relay, Power (includes mounting hardware)	1
7	101841901	Board, Control	1
8	101838701	Bracket, Mounting, Relay and Reset Board	1
9	101838601	Switch, 4-Position, Slide	1
10	1011707	Bracket, Mounting	2
11	8233	Nut, Lock, 1/4-20	4
12	7847	Screw, Hex-Head Cap, 1/4-20 x 3/4	4
13	1015917	Bushing, Strain Relief, AC Cord	1
14	101829001	Cordset, AC, 3 x 1.5 mm x 24 Inches Long, with Grounded Plug	1
15	101838401	Breaker, Circuit, 10-Amp	2
16	1012098	Bushing, Strain Relief, DC Cord, 12 AWG	1
17	101829101	Cordset, DC, 90.5 Inches Long, with Leads, 12 AWG	1
18	1012101	Assembly, Fuse (includes hardware)	1
19	101828501	Ammeter (includes hardware)	1
20	101841801	Kit, Wire Assembly	1
21	101914401	Assembly, AC Voltage Suppressor	1
22	7479	Screw, Hex-Head Cap, 1/4-20 x 1-1/4	4
23	1014306	Washer, Flat, 1/4	4
24	451	Washer, Lock, 1/4	4
25	1028	Nut, Hex, 1/4-20	4
26	1016673	Housing, Cord	1
27	8796	Screw, Phillips-Head, #7-19 x 3/4	4
28	101801001	Plate, Receptacle Backing	1
	1017189	Shrink, Heat (1-1/2 inch x 4 feet) (not shown)*	A/R
		*Heat shrink is available in 3-inch lengths, nonstandard.	
	****	Special order item available upon request.	

15

E

MAINTENANCE AND SERVICE TOOLS

16

G

E

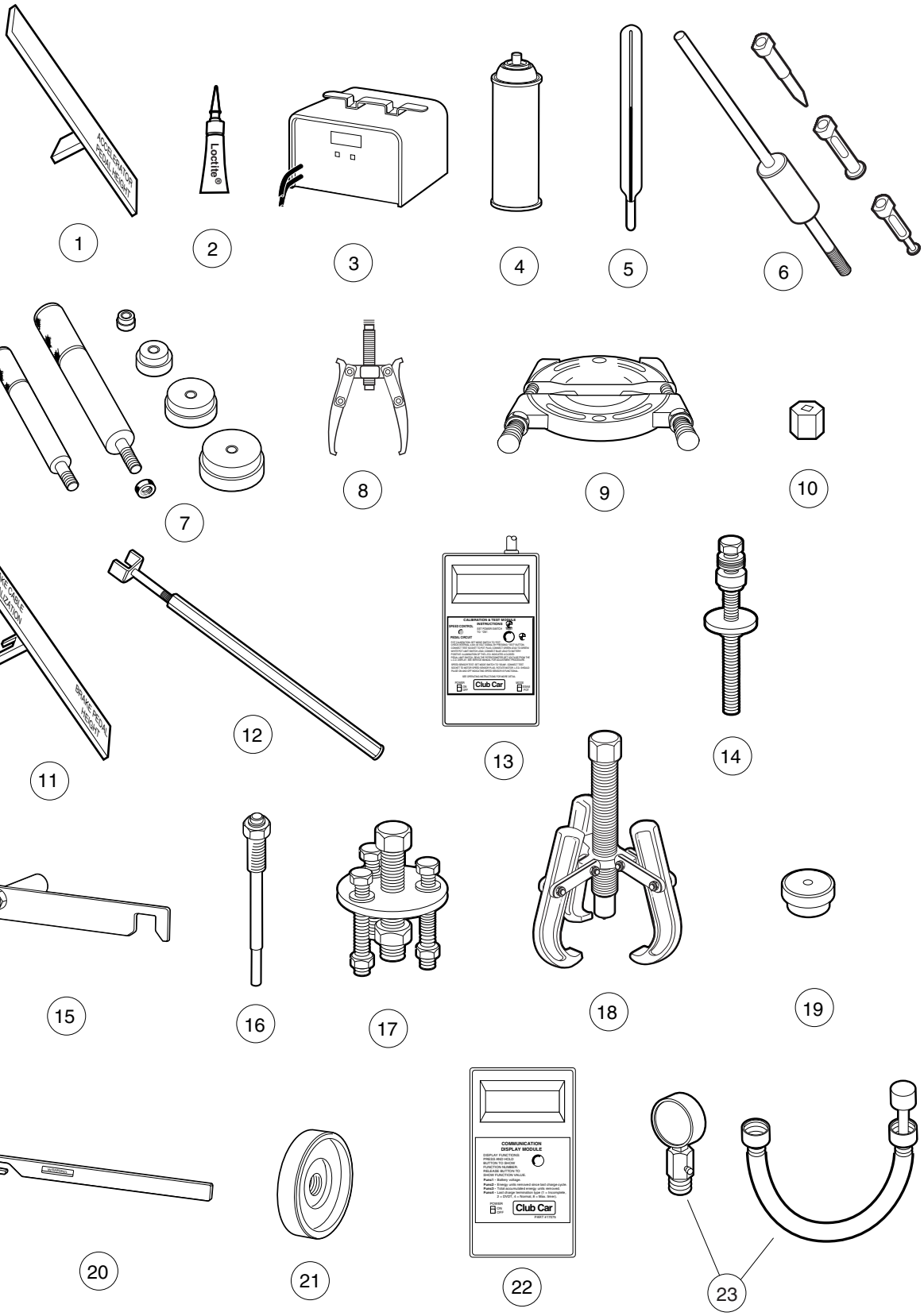

1 2 3 4 5 6 7 8 9 10 11 12 13 14 15 16 17 18 19 20 21 22 23

ITEM	PART NO.	DESCRIPTION	QTY GAS	QTY ELEC
		1 2 3 4 The following tool list includes all tools available from Club Car for maintenance and service procedures for gasoline and/or electric vehicles, both past and present models. Be sure to carefully examine the tool list for applicability to your vehicle before ordering.		
1	101871001	Accelerator Pedal Adjustment Tool	1	1
2	101813202	Adhesive, Guide Ring, 3-Gram Tube	1	1
3	101831901	Battery Discharge Machine, 36/48 Volt		1
4	1014305	Battery Terminal Protector Spray	1	1
5	1011767	Battery Thermometer		1
6	1016417	Bearing and Oil Seal Remover Assembly	1	1
7	1016416	Bearing Driver Set	1	1
8	1012811	Bearing Puller	1	1
9	1012812	Bearing Puller Wedge Attachment	1	1
10	1013582	Brake Adjustment Tool (used only on vehicles with manually adjusted mechanical brakes)	1	1
	102249901	Brake Pedal Adjustment Tool Kit (used for the Carryall Electric Industrial Truck only) (includes items 11 and 12)		1
11	****	Brake Pedal Adjustment Tool		1
12	****	Brake Pedal Tension Tool		1
13	101887101	Calibration Test Module		1
14	101808401	Cam Installation Tool	1	
	1014510	Clutch Tool Kit (includes items 15 - 21)	1	
15	1014498	Clutch Alignment Tool (for pre-unitized transaxle vehicles built prior to 1997 model year)	1	
16	1014496	Drive Clutch Puller	1	
17	1014497	Drive Clutch Hub Puller	1	
18	1014508	Driven Clutch Cam Puller	1	
19	1014507	Driven Clutch Puller Plug	1	
20	1015524	Drive Clutch Holder Tool Assembly	1	
21	101809101	Press Weldment	1	
22	101831801	Communication Display Module		1
23	101641002	Compression Gauge and Adapter	1	
		Please refer to the maintenance and service manual for proper tool application.		
	****	Special order item available upon request		

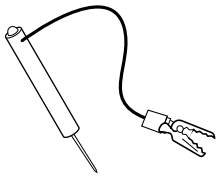

24

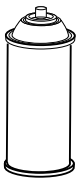

25

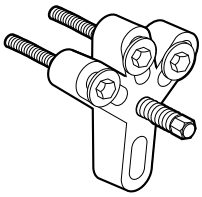

26

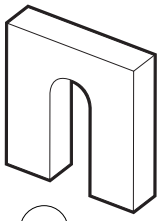

27

28

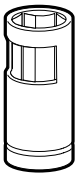

29

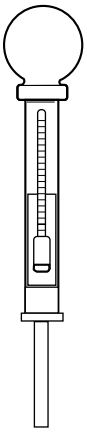

30

31

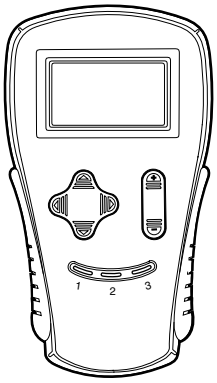

32

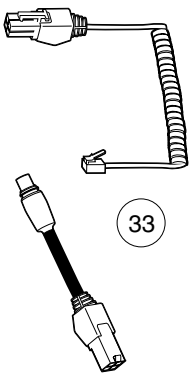

33

34

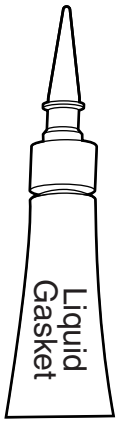

35

36

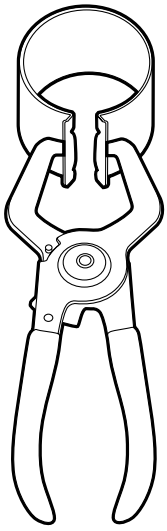

37

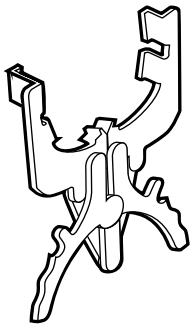

38

39

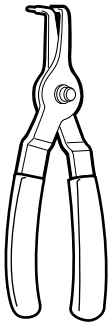

40

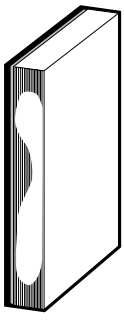

41

42

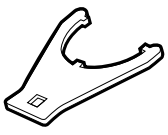

43

44

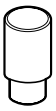

45

MAINTENANCE AND SERVICE TOOLS, CONTINUED

ITEM	PART NO.	DESCRIPTION	QTY GAS	QTY ELEC
		1 2 3 4		
24	1011273	Continuity Tester	1	1
25	1012151	Dry Moly Lubricant	1	1
26	1016627	Flywheel Puller Kit	1	
27	1016418	Gear Yoke	1	1
28	101933101	Governor Shaft Installation Tool	1	
29	102169401	Hydraulic Brake Adjuster (for vehicles equipped with hydraulic brakes)	1	
30	1011478	Hydrometer	1	1
31	1013593	Internal Retaining Ring Pliers	1	1
32	102248803	IQ Display Module (IQDM) Kit (for IQ System vehicles only) (includes items 33 and 34)		1
33	102241502	Cable, IQDM		1
34	102251501	Adaptor, Cable		1
35	101928701	Liquid Gasket (transaxle case)	1	1
36	102243402	Moly-Teflon Lubricant (4-oz. (113-gram) tube)		1
37	1016414	Piston Ring Compressor Kit (FE290, FE350 and FE400 engines)	1	
38	1016415	Piston Ring Pliers	1	
39	1012549	Retaining Ring Pliers, 45° External	1	1
40	1012560	Retaining Ring Pliers, 90° Internal	1	1
41	101823101	Safety First Card (50 per pack)	1	1
42	1012809	Seal Puller	1	1
43	102330901	Spanner Wrench (for coil over shock front suspension vehicles only)	1	1
44	1014264	Steering Column Bearing Press Tool	1	1
45	1014259	Steering Column Retaining Ring Tool	1	1

Please refer to the maintenance and service manual for proper tool application.

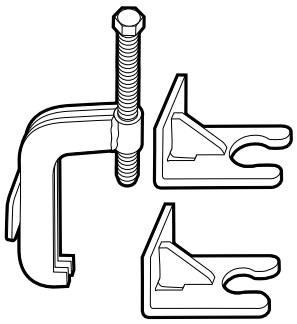

46

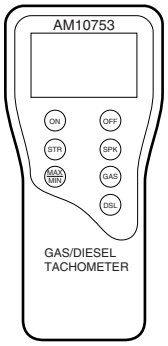

47

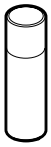

48

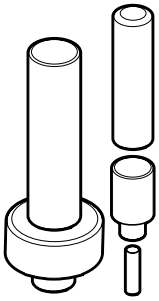

49

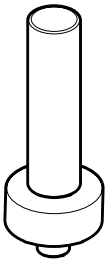

50

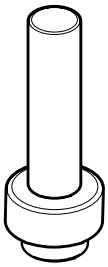

51

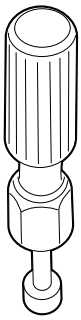

52

53

54

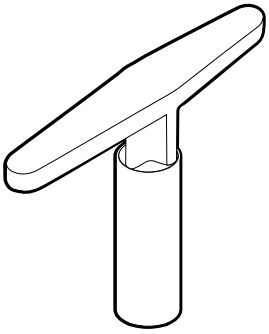

55

56

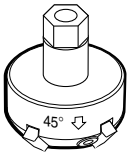

57

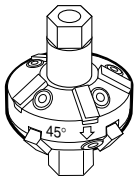

58

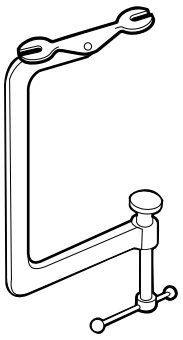

59

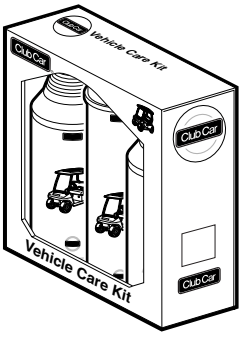

60

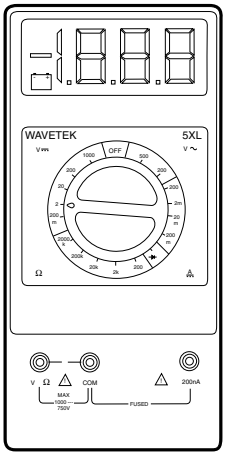

61

MAINTENANCE AND SERVICE TOOLS, CONTINUED

ITEM	PART NO.	DESCRIPTION	QTY GAS	QTY ELEC
		1 2 3 4		
46	102061201	Steering Wheel Puller Tool	1	1
47	AM10753	Tachometer	1	
48	101997201	Paint, Touch-Up – Beige	1	1
48	101997202	Paint, Touch-Up – White	1	1
48	101997203	Paint, Touch-Up – Red	1	1
48	101997204	Paint, Touch-Up – Gray	1	1
48	101997205	Paint, Touch-Up – Dark Gray	1	1
48	101997206	Paint, Touch-Up – Royal Blue (Pacific Blue)	1	1
48	101997207	Paint, Touch-Up – Black	1	1
48	101997209	Paint, Touch-Up – Dark Green	1	1
48	101997211	Paint, Touch-Up – Classic Blue (Navy)	1	1
48	101997212	Paint, Touch-Up – Burgundy	1	1
49	1014115	Transmission Tool Kit	1	
50	1014161	Transaxle Pinion Seal Tool	1	
51	1014162	Transaxle Axle Seal Tool	1	
52	1016413	Valve Clearance Adjuster Screw Holder (for FE290 engines only)	1	
53	101641201	Valve Guide Reamer	1	
54	101641202	Arbor	1	
55	1016551	Valve Seat Cutter T-Wrench	1	
56	1016552	Valve Seat Cutter Guide	1	
57	1016553	Valve Seat Cutter, 45° (32 mm diameter) (for FE290 engines only)	1	
58	1016554	Valve Seat Cutter, 45°/30° (35 mm diameter)	1	
59	101641101	Valve Spring Compressor	1	
60	AM10021	Vehicle Care Kit	1	1
61	1011480	Volt Ohm Meter	1	1
62	101611003	Tune-Up Kit, All OHV (includes air filter, spark plug, oil filter, fuel filters) (not shown)	1	

Please refer to the maintenance and service manual for proper tool application.

16
G
E

INDEX

Part Number and *Page*

AM10080 *11-5*
AM10081 *11-5*
AM10682 *2-3*
AM10021 *16-7*
AM10419 *10-5*
AM10724 *7-5*, *7-17*
AM10753 *16-7*
CCX8506 *15-3*, *15-5*, *15-11*
183 *8-13*, *10-3*, *12-45*
304 *1-7*, *1-23*, *1-33*, *12-37*
320 *5-11*
332 *1-7*, *1-9*, *1-21*, *1-23*, *1-33*, *8-13*, *9-3*, *9-5*, *12-21*, *12-37*, *12-41*
334 *4-13*, *4-15*, *5-3*, *5-5*
357 *5-9*
451 *1-21*, *1-23*, *4-5*, *9-3*, *9-5*, *12-5*, *12-13*, *13-3*, *13-5*
705 *6-27*
706 *5-9*
1016 *12-45*
1017 *12-5*, *12-45*
1028 *4-7*, *4-9*, *12-5*, *12-13*
1032 *4-7*, *4-9*
1035 *4-3*, *5-5*, *5-7*, *5-11*
1218 *1-21*, *1-23*, *12-17*, *12-41*
1241 *1-21*, *1-23*, *4-7*, *4-9*, *4-13*, *4-15*, *6-19*, *6-27*, *6-29*, *9-3*, *12-17*, *12-39*, *12-41*
1242 *4-7*, *4-9*, *6-7*, *6-27*, *12-17*, *12-25*, *12-41*
1308 *5-7*, *5-11*
1606 *8-13*
1620 *1-5*
1624 *4-13*, *4-15*, *5-5*
1631 *8-15*
2402 *5-7*, *5-11*
4029 *6-17*, *12-37*
4034 *6-19*, *12-39*
7048 *5-9*, *5-13*
7173 *6-19*, *6-27*, *6-29*, *12-17*, *12-39*, *12-41*
7174 *4-11*, *5-3*, *6-27*, *8-11*, *9-3*, *9-5*, *12-17*, *12-25*, *12-41*, *13-3*, *13-5*
7251 *1-3*
7310 *2-3*, *2-5*
7330 *11-7*, *14-3*
7335 *11-5*, *14-3*
7336 *14-3*
7473 *1-3*, *1-13*, *1-21*, *1-23*, *4-7*, *4-9*, *4-13*, *4-15*, *6-19*, *6-27*, *6-29*, *12-5*, *12-39*
7479 *1-7*
7532 *1-35*
7539 *5-7*, *5-11*
7540 *5-5*, *5-7*, *5-11*
7555 *5-5*, *5-7*, *5-11*
7569 *5-15*, *5-17*
7577 *15-3*, *15-5*, *15-7*, *15-9*, *15-13*
7591 *6-23*, *12-37*
7602 *5-5*, *5-7*, *5-11*
7716 *4-7*, *4-9*, *4-13*, *4-15*
7820 *12-37*
7840 *5-9*
7847 *1-5*, *9-3*, *9-5*
7893 *6-7*, *12-37*
7910 *5-9*
7973 *1-5*, *6-3*, *8-15*
8028 *1-11*, *1-23*
8049 *12-13*
8056 *12-5*, *12-47*
8057 *6-3*, *12-5*, *12-13*
8058 *6-3*, *12-5*, *12-13*
8067 *5-9*, *5-13*
8168 *8-15*
8233 *1-7*, *1-21*, *1-33*, *4-13*, *4-15*, *8-3*, *12-13*, *12-21*, *12-37*
8248 *1-7*, *8-3*, *12-21*
8251 *1-7*, *1-23*
8304 *1-11*, *1-23*
8449 *12-5*
8450 *6-15*, *10-3*, *12-13*
8455 *6-3*
8626 *4-7*, *4-9*
8639 *6-17*, *12-25*, *12-37*, *12-41*
8717 *6-3*
8745 *5-9*, *5-13*
8754 *4-13*, *4-15*, *5-3*, *5-5*, *5-7*, *5-9*, *5-11*, *5-17*, *6-27*
8755 *5-9*
8861 *5-7*, *5-11*
8990 *5-5*, *12-3*, *12-5*, *12-21*, *12-27*, *12-43*
8251 *1-11*
1010005 *5-9*, *5-13*
1010124 *5-7*, *5-11*
1010138 *5-7*, *5-11*
1010145 *5-15*, *5-17*
1010150 *5-9*, *5-13*
1010177 *5-9*, *5-13*
1010219 *5-7*, *5-11*
1010434 *1-3*, *1-9*, *1-13*, *1-15*, *1-17*, *1-25*, *1-27*, *1-31*
1010435 *1-3*, *1-13*, *1-31*, *1-35*
1010543 *1-9*, *1-11*, *1-19*, *1-23*, *1-25*, *1-27*, *1-29*
1010545 *1-29*
1010695 *1-11*, *1-23*
1010805 *4-7*, *4-9*
1010829 *4-3*, *4-5*, *4-9*, *4-11*
1010850 *4-3*, *4-5*, *4-11*
1010877 *4-7*, *4-9*
1010878 *1-35*, *4-7*, *4-9*
101090801 *12-15*, *12-23*, *12-47*, *12-57*
101090802 *12-47*, *12-57*
1010909 *6-17*
1010921 *4-7*, *4-9*
1010927 *4-7*, *4-9*
1010932 *4-7*, *4-9*
1010933 *4-7*, *4-9*
1010934 *1-25*, *6-29*, *13-3*, *13-5*
1010954 *6-3*, *6-7*, *6-15*, *11-3*
1010984 *2-3*, *2-5*, *5-9*, *5-13*
1011014 *1-3*
1011017 *1-3*
1011019 *1-5*
1011084 *4-13*
1011114 *4-5*, *4-11*
1011137 *4-11*
1011182 *1-11*
1011210 *1-11*, *1-23*
1011219 *1-11*, *1-23*
1011220 *1-11*, *1-23*
1011221 *1-11*, *1-23*
1011222 *1-11*, *1-23*
1011229 *6-9*, *6-17*, *12-27*, *12-37*
1011273 *16-5*
1011280 *6-19*, *12-39*
1011290 *13-3*
1011291 *11-7*
1011303 *4-5*, *4-11*
1011304 *5-9*, *5-13*
1011382 *1-5*
1011389 *1-11*, *1-23*
1011393 *5-9*, *5-13*
1011394 *1-3*
1011402 *4-7*, *4-9*
1011411 *13-3*, *13-5*
1011415 *5-15*, *5-17*
1011418 *4-7*, *4-9*
1011439 *6-19*, *12-39*
101146302 *4-5*, *4-11*
1011464 *4-5*, *4-11*
1011465 *4-5*, *4-11*
1011466 *4-3*, *4-5*, *4-11*
1011467 *4-5*, *4-11*
1011478 *16-5*
1011480 *16-7*
1011497 *6-21*, *12-47*
1011498 *6-21*, *12-47*
1011557 *6-19*, *6-21*, *12-39*, *12-47*
1011558 *6-21*, *6-23*, *12-17*, *12-47*
1011571 *6-21*, *12-47*
1011578 *1-11*, *1-23*, *5-3*, *12-15*, *12-23*, *12-47*, *12-57*
1011582 *6-21*, *6-23*, *12-47*, *12-57*
1011610 *6-21*, *12-47*
1011622 *6-23*
1011652 *1-9*, *1-19*, *1-29*
1011694 *4-13*, *4-15*
1011697 *1-33*, *5-3*, *7-27*, *8-9*, *8-11*, *9-5*
1011700 *4-13*

INDEX

1011707 *15-11*, *15-13*
1011734 *4-13*
1011767 *16-3*
1011779 *4-3*, *4-5*, *4-7*, *4-9*, *4-11*
1011825 *6-17*, *12-37*
1011843 *6-21*, *12-47*
101187702 *4-7*, *4-9*, *4-13*, *4-15*
1011887 *5-9*, *5-13*
1011892 *5-9*, *5-13*
1011930 *5-5*, *5-7*, *5-11*
1011988 *1-13*, *1-31*, *8-3*
1011990 *1-29*, *1-35*
1012030 *5-9*, *5-13*
1012098 *15-3*, *15-5*, *15-7*, *15-9*, *15-11*
1012101 *15-3*, *15-7*, *15-9*, *15-11*, *15-13*
1012151 *16-5*
1012159 *1-7*
1012164 *7-27*
1012181 *5-15*
1012182 *5-15*
1012285 *1-21*, *1-33*, *6-3*, *8-3*, *8-11*, *12-17*, *12-25*, *12-41*, *12-43*
1012295 *6-7*, *6-15*
1012303 *1-35*, *5-9*, *5-13*, *5-15*, *5-17*
1012304 *5-15*, *5-17*
1012328 *6-29*
1012333 *6-3*
1012353 *12-5*
1012382 *6-5*, *6-13*
1012412 *1-7*, *1-15*, *1-17*
1012431 *6-3*, *6-15*, *6-21*
1012438 *8-15*, *12-45*
1012467 *5-5*
1012505 *6-9*, *6-19*, *12-3*, *12-39*
1012528 *9-3*, *9-5*, *12-17*, *12-25*, *12-41*
1012549 *16-5*
1012560 *16-5*
1012565 *5-3*
1012566 *5-3*
1012571 *7-27*
1012581 *1-15*
1012594 *6-3*
1012597 *1-19*
1012604 *5-3*
1012605 *5-3*
1012649 *8-3*
1012656 *1-19*
1012657 *1-19*
1012711 *11-3*
1012714 *11-5*
1012740 *11-5*
1012741 *11-5*
1012747 *11-5*
1012748 *11-5*
1012752 *11-3*
1012809 *16-5*
1012811 *16-3*
1012812 *16-3*
1012830 *6-27*, *9-3*, *9-5*
1012903 *12-5*
1012981 *7-5*, *7-17*
1012986 *6-19*
1012987 *6-3*, *12-13*
1013001 *6-25*
1013003 *6-25*
1013005 *6-25*
101301102 *6-25*
1013032 *1-7*, *1-17*
1013035 *5-5*
1013042 *5-5*
1013044 *5-5*
1013051 *5-5*
1013052 *5-5*
1013061 *1-29*, *12-5*, *12-15*, *12-23*, *12-45*
1013135 *5-9*, *5-13*
1013164 *5-15*
1013169 *1-29*
1013207 *4-3*, *4-5*, *5-15*, *5-17*
1013309 *1-25*, *1-27*, *1-29*
1013311 *1-25*, *1-27*
1013312 *1-19*, *1-25*, *1-27*, *1-29*
1013335 *1-11*
1013343 *1-5*
1013344 *1-5*
1013357 *1-17*, *1-29*, *1-35*, *6-17*, *12-37*, *12-45*
1013461 *6-17*, *12-5*, *12-37*
101347501 *1-3*
101347503 *1-3*
101347505 *1-13*, *1-31*
1013494 *1-5*
1013531 *4-7*, *4-9*
1013582 *16-3*
1013587 *6-3*
1013589 *6-3*, *6-7*, *6-15*
1013590 *6-3*
1013591 *6-3*
1013593 *16-5*
1013609 *6-7*, *6-15*
1013677 *3-5*, *3-9*, *3-11*, *3-15*
1013683 *12-15*, *12-23*
1013687 *8-3*
1013692 *8-3*
1013700 *8-11*
1013734 *9-3*, *9-5*, *12-25*
1013746 *8-3*, *8-9*
1013759 *11-3*
1013768 *11-7*
1013769 *11-7*
1013770 *11-7*
1013771 *11-7*
1013772 *11-7*
1013773 *11-7*
1013774 *11-7*
1013787 *11-7*
1013790 *11-7*
1013791 *11-7*
1013794 *11-7*, *14-3*
1013857 *6-19*, *12-39*
1013860 *12-5*
1013861 *5-3*
1013869 *4-7*, *4-9*
1013870 *4-7*, *4-9*
1013871 *4-13*, *4-15*
1013872 *1-35*
1013876 *4-7*, *4-9*
1013886 *12-5*
1013887 *12-5*
1013924 *4-3*, *4-5*, *4-11*, *7-27*
1013998 *12-5*
1014000 *12-5*
1014003 *12-5*
1014007 *1-23*, *4-13*, *4-15*
1014010 *12-5*
1014017 *12-5*
1014019 *12-5*
1014049 *10-3*
1014050 *10-3*
1014051 *10-3*
1014052 *10-3*
1014055 *10-3*
1014056 *10-3*
1014057 *10-3*
1014058 *10-3*
1014059 *10-3*
1014062 *10-3*
1014065 *6-3*
1014070 *10-5*
1014072 *10-5*
1014078 *10-5*
1014080 *10-5*
1014089 *6-3*
1014109 *12-5*
1014115 *16-7*
1014116 *8-3*
1014119 *6-5*, *6-13*
1014125 *5-3*
1014126 *5-3*
1014145 *6-3*, *6-7*, *6-15*
1014153 *4-3*, *4-5*, *4-11*
1014161 *16-7*
1014162 *16-7*
1014189 *12-5*
1014193 *11-7*
1014198 *1-3*
1014201 *13-3*, *13-5*
1014207 *11-7*
1014213 *5-3*

INDEX

1014214 *5-3*
1014216 *5-3*
1014217 *5-3*
1014236 *5-15*
1014253 *12-5*
1014259 *16-5*
1014264 *16-5*
1014276 *5-9*, *5-13*
1014287 *10-3*
1014288 *5-3*, *6-29*, *12-17*, *12-25*
1014289 *6-25*
1014304 *12-15*, *12-23*, *12-47*, *12-57*
1014305 *16-3*
1014306 *1-7*, *1-21*, *1-33*
1014321 *1-25*, *1-27*, *1-29*
1014374 *6-29*
1014375 *6-29*
1014387 *1-25*, *1-27*, *1-29*
1014392 *1-9*, *1-17*
1014413 *8-11*
1014414 *12-5*
1014453 *10-3*
1014454 *10-5*
1014471 *1-35*
1014496 *16-3*
1014497 *16-3*
1014498 *16-3*
1014507 *16-3*
1014508 *16-3*
1014510 *16-3*
1014523 *8-3*
1014524 *8-3*
1014528 *12-13*
101454602 *5-15*
101454902 *5-15*
1014555 *5-15*, *5-17*
1014573 *5-15*
1014645 *1-5*
1014675 *5-15*
1014727 *6-3*
1014771 *2-3*, *2-5*
1014807 *6-3*, *6-7*, *6-15*, *12-5*
1014808 *6-7*, *12-13*
1014856 *12-7*
1014871 *12-13*
1014901 *5-15*
1014902 *5-15*, *5-17*
1014928 *8-3*
1014947 *12-17*, *12-25*, *12-41*
1014948 *6-15*, *12-17*, *12-41*
1014999 *12-5*
1015032 *1-5*
1015064 *6-3*, *12-13*
1015072 *12-15*, *12-23*, *12-47*, *12-57*
1015091 *1-11*, *1-23*
1015137 *8-3*, *8-9*
1015139 *8-3*, *8-15*
1015143 *8-3*
1015188 *8-3*
101524002 *6-27*
1015330 *9-3*
1015332 *6-5*, *6-13*, *7-3*, *7-15*
1015345 *6-7*, *6-15*
1015356 *1-35*
1015371 *6-7*
1015372 *6-7*, *6-15*
1015373 *6-7*, *6-15*
1015399 *1-35*
1015405 *6-7*, *6-15*
1015408 *8-11*
1015426 *8-13*, *8-15*
1015453 *5-19*
1015457 *5-19*
101547601 *3-5*, *3-9*, *3-11*, *3-15*
1015507 *1-35*
1015524 *16-3*
1015525 *1-7*, *1-17*
1015530 *1-33*
1015539 *1-37*
101553901 *3-17*
1015545 *5-3*
1015583 *1-35*, *5-9*, *5-13*, *5-15*, *5-17*
1015597 *5-5*, *5-7*, *5-9*, *5-11*, *5-13*
1015613 *5-19*
1015614 *5-19*
101562602 *1-11*
101562604 *1-11*
101562605 *1-11*
101562701 *1-19*
101562702 *1-11*, *1-19*, *1-23*, *1-25*, *1-27*, *1-29*
101562704 *1-11*, *1-19*, *1-23*, *1-25*, *1-27*, *1-29*
101562710 *1-11*, *1-19*, *1-23*, *1-25*, *1-27*, *1-29*
101564502 *1-25*, *1-27*
101564503 *1-25*, *1-27*
101564505 *1-25*, *1-27*
101564804 *1-23*
101564805 *1-11*, *1-23*
101564807 *1-11*, *1-23*
101564808 *1-11*, *1-23*
1015649 *7-3*, *7-15*
101565202 *1-11*
101565205 *1-11*
101565206 *1-11*
1015654 *1-37*
1015656 *1-37*
1015660 *1-37*
1015661 *4-15*
101567202 *2-3*
101570502 *2-3*
101570506 *2-3*, *2-5*
101570507 *2-3*, *2-5*
101570509 *2-3*, *2-5*
101570512 *2-3*
101570513 *2-3*
101570514 *2-5*
1015707 *2-3*, *2-5*
1015720 *6-9*, *6-23*
1015737 *6-5*, *6-7*, *6-13*, *6-15*
1015741 *6-7*, *6-15*, *12-45*
1015752 *6-7*, *6-15*, *6-23*, *8-13*, *8-15*, *12-9*, *12-57*
1015760 *5-19*
1015769 *6-5*, *6-13*
1015777 *6-7*
1015814 *9-3*, *9-5*
1015845 *8-11*
101584502 *8-11*
1015878 *6-7*, *6-15*
1015914 *15-3*, *15-7*, *15-9*, *15-11*, *15-13*
1015917 *15-3*, *15-7*, *15-11*, *15-13*
1015920 *6-5*, *6-27*
1015932 *6-27*
1015969 *7-3*, *7-15*
1016004 *8-3*
1016074 *6-27*
1016077 *1-37*
101609401 *3-17*
101610901 *3-5*, *12-5*
101611003 *16-7*
1016154 *5-3*
1016156 *5-3*
1016175 *12-5*
1016181 *5-3*
1016183 *5-3*
1016202 *8-11*
1016203 *10-3*, *10-5*
1016214 *5-3*
101621601 *3-3*, *3-7*, *3-13*
1016219 *5-3*
1016269 *5-3*
1016289 *10-3*
1016337 *11-5*
1016338 *11-5*
1016341 *11-3*
1016342 *6-3*
1016346 *5-7*, *5-11*
1016349 *5-7*, *5-11*
1016350 *5-7*, *5-11*
1016353 *5-7*, *5-11*
1016356 *6-17*, *12-37*, *12-45*
1016363 *12-45*
1016366 *12-45*
1016379 *1-33*
1016380 *6-13*
1016384 *5-9*, *5-13*

INDEX

1016385 *5-7*, *5-11*
1016386 *5-9*, *5-13*
1016387 *5-9*, *5-13*
1016389 *5-9*, *5-13*
101641002 *16-3*
101641101 *16-7*
101641201 *16-7*
101641202 *16-7*
1016413 *16-7*
1016414 *16-5*
1016415 *16-5*
1016416 *16-3*
1016417 *16-3*
1016418 *16-5*
1016423 *6-15*, *12-45*
101642572 *8-5*
101642575 *8-5*, *8-7*
101642578 *8-5*, *8-7*
101642580 *8-5*, *8-7*
101642582 *8-5*, *8-7*
101642585 *8-7*
1016429 *7-7*, *7-19*
1016430 *7-9*
1016431 *7-9*
1016432 *7-7*, *7-19*, *11-3*
1016435 *7-7*
1016436 *7-9*, *7-21*
1016437 *8-5*, *8-7*
1016438 *8-9*
1016439 *8-9*
1016440 *8-9*
1016441 *8-9*
1016442 *7-9*, *7-21*
1016443 *7-3*
1016444 *8-9*
1016445 *7-5*, *7-17*
1016446 *7-11*
1016447 *7-9*
1016448 *7-9*
1016449 *7-9*, *7-21*
1016450 *7-9*, *7-21*
1016451 *7-9*
1016452 *7-9*, *7-21*
1016453 *7-11*
1016454 *7-11*, *7-23*
1016455 *7-5*, *7-17*
1016456 *7-3*, *7-5*, *7-11*, *7-15*, *7-17*
1016457 *7-7*, *7-19*
1016458 *7-9*, *7-11*, *7-21*
101645901 *7-13*
101645902 *7-13*
101645903 *7-13*
1016460 *7-13*
101646101 *7-13*
101646102 *7-13*
101646103 *7-13*
1016467 *7-7*, *7-19*
1016469 *7-13*
1016470 *7-13*, *7-25*
1016471 *7-9*
1016472 *7-11*, *7-23*
1016473 *7-7*, *7-19*
1016474 *7-9*, *7-21*
101647501 *7-13*
101647502 *7-13*
1016479 *7-9*, *7-21*
1016480 *8-9*
101648102 *8-9*
101648203 *7-7*, *7-19*
1016483 *7-9*, *7-21*
1016484 *7-7*
1016486 *8-5*, *8-7*
1016489 *7-9*, *7-21*
101649002 *8-9*
1016493 *7-5*
1016494 *7-11*, *7-23*
1016496 *7-11*, *7-23*
1016497 *7-5*, *7-17*
1016499 *8-5*, *8-7*
1016501 *8-5*, *8-7*
1016502 *7-7*, *7-19*
1016505 *7-5*
1016506 *7-11*, *7-23*
1016507 *7-3*, *7-15*
1016509 *7-13*
1016510 *7-11*, *7-23*
101651402 *2-3*
101651406 *2-3*, *2-5*
101651407 *2-3*, *2-5*
101651409 *2-3*, *2-5*
101651412 *2-3*
101651413 *2-3*
101651414 *2-5*
1016516 *7-13*
1016517 *7-9*, *7-21*
1016518 *7-21*
1016519 *7-9*, *7-21*
1016520 *7-11*
1016521 *7-11*, *7-23*
1016523 *7-9*
1016524 *7-3*
1016525 *7-3*
1016526 *7-3*
1016531 *7-3*, *7-15*
1016532 *7-13*
1016533 *7-13*
1016535 *7-11*, *7-23*
1016536 *7-3*
1016537 *7-7*, *7-19*
1016538 *7-11*, *7-23*
1016539 *7-3*, *7-15*
1016541 *7-13*, *7-25*
1016542 *7-9*
1016544 *7-5*, *7-9*, *7-11*, *7-17*, *7-21*, *7-23*
1016545 *7-9*, *12-17*, *12-41*
1016546 *8-11*
1016547 *7-3*, *7-13*, *7-15*, *7-25*, *8-9*
1016548 *7-5*
1016549 *7-9*, *7-21*
101655001 *7-13*
101655002 *7-13*
101655003 *7-13*
101655004 *7-13*
101655005 *7-13*
101655006 *7-13*
101655007 *7-13*
101655008 *7-13*
101655009 *7-13*
1016551 *16-7*
1016552 *16-7*
1016553 *16-7*
1016554 *16-7*
1016557 *4-5*, *4-11*
1016558 *7-13*
1016559 *7-13*
1016560 *7-9*, *7-21*
1016561 *7-5*, *7-17*
1016562 *7-5*, *7-13*, *7-17*, *7-25*
1016563 *7-9*, *7-21*
1016564 *7-11*, *7-23*
1016565 *7-11*
1016566 *7-9*, *7-21*
1016567 *7-11*
1016568 *7-13*
1016569 *7-9*, *7-21*
1016570 *7-7*, *7-19*
1016571 *7-13*, *7-25*
1016572 *8-9*
1016573 *4-5*, *4-11*
1016576 *7-7*, *7-19*
1016578 *7-5*, *7-17*
1016579 *7-5*, *7-17*
1016580 *7-13*
1016581 *7-7*, *7-19*
1016582 *8-9*
1016583 *7-9*, *7-21*
1016584 *7-11*, *7-23*
1016585 *8-5*, *8-7*
1016586 *7-5*, *7-17*
1016587 *7-5*, *7-17*
1016588 *7-5*, *7-17*
101660404 *1-5*
1016622 *5-3*
1016627 *16-5*
1016630 *6-9*, *6-19*
1016631 *12-45*
1016663 *5-3*
1016668 *1-13*, *1-31*

INDEX

1016670 *1-25*
1016672 *11-7*
1016673 *1-25*, *15-11*, *15-13*
1016679 *1-33*
101668201 *12-47*, *12-57*
1016698 *12-31*, *12-35*, *12-51*, *12-55*
101670201 *1-3*
1016711 *1-3*
1016717 *6-23*, *12-57*
1016718 *1-5*
1016723 *1-25*, *1-27*
1016724 *1-35*
101672701 *6-3*
101672702 *6-3*
1016729 *12-31*, *12-35*, *12-51*, *12-55*
1016732 *12-31*, *12-35*, *12-51*, *12-55*
101674702 *4-13*
101674704 *4-13*
1016751 *1-21*, *1-23*, *1-25*, *1-27*, *1-29*
101675501 *1-21*, *1-23*
101675502 *1-21*, *1-23*, *1-25*, *1-27*, *1-29*
101675504 *1-21*, *1-23*, *1-25*, *1-27*, *1-29*
101675505 *1-29*
101675506 *1-21*, *1-23*, *1-25*, *1-27*
101677701 *1-21*, *1-23*, *1-25*, *1-27*, *1-29*
101677702 *1-21*, *1-23*, *1-25*, *1-27*, *1-29*
101677703 *1-21*, *1-23*
101677705 *1-21*, *1-23*, *1-25*, *1-27*, *1-29*
1016801 *10-3*
1016813 *5-19*
1016814 *5-19*
1016816 *1-29*
1016819 *1-29*
1016824 *1-29*
1016838 *1-31*
1016839 *1-27*, *1-29*
101684102 *1-29*
101684103 *1-29*
101684105 *1-29*
1016842 *1-13*, *1-31*
1016843 *1-31*
1016845 *12-13*
1016849 *6-9*, *6-17*, *6-23*, *12-3*, *12-37*, *12-57*
1016851 *6-9*, *6-17*, *6-21*, *6-23*, *12-3*, *12-37*, *12-47*, *12-57*
1016859 *6-9*, *6-17*, *6-21*, *6-23*, *12-3*, *12-37*, *12-47*, *12-57*
1016868 *1-3*
1016875 *1-33*
1016876 *1-33*
1016879 *6-17*, *12-37*
1016880 *6-17*, *12-37*
1016883 *6-27*
1016901 *10-3*
1016904 *9-5*
1016916 *1-9*, *1-23*
101692501 *1-3*
101692502 *1-3*
101692504 *1-3*
101692506 *1-3*
101692509 *1-3*
101692510 *1-3*
101692511 *1-3*
101692512 *1-3*
101692513 *1-3*
101692514 *1-3*
101692515 *1-3*
101692602 *1-7*
101692604 *1-7*
101692606 *1-7*
101692609 *1-7*
101692610 *1-7*
101692611 *1-7*
101692612 *1-7*
101692613 *1-7*
1016930 *1-29*
101693201 *3-7*, *3-13*
101693301 *1-7*
101693302 *1-7*
101693304 *1-7*
101693306 *1-7*
101693309 *1-7*
101693310 *1-7*
101693311 *1-7*
101693312 *1-7*
101693313 *1-7*
101693901 *1-3*
101693902 *1-3*
101693904 *1-3*
101693906 *1-3*
101693908 *1-3*
101693909 *1-3*
101693910 *1-3*
101693911 *1-3*
101693912 *1-3*
101693913 *1-3*
101693914 *1-3*
1016947 *6-3*
1016952 *1-5*
1016967 *1-3*
1016970 *1-25*
1016997 *6-15*
1017029 *4-7*, *4-9*
1017035 *6-21*, *12-47*
101705701 *3-3*, *3-7*, *3-11*, *3-17*
1017062 *6-17*, *12-37*
1017064 *6-17*, *12-37*
1017065 *6-17*, *12-37*
101707801 *3-17*
1017079 *1-33*
1017080 *1-3*
101708301 *1-5*
1017141 *1-7*, *1-17*
1017187 *15-11*, *15-13*
1017188 *10-3*, *10-5*
1017189 *15-11*, *15-13*
1017203 *8-3*
1017211 *4-9*
1017221 *7-3*
1017226 *5-3*
1017231 *11-3*
1017232 *4-11*
1017235 *5-15*
1017238 *6-15*
1017239 *6-15*
1017243 *6-15*
1017259 *1-21*
1017266 *5-7*, *5-11*
1017273 *5-3*
101728201 *1-19*
101728202 *1-19*
101728203 *1-19*
101728204 *1-19*
101728210 *1-19*
101728211 *1-19*
101728213 *1-19*
101728214 *1-19*
101728701 *1-17*
101728702 *1-17*
101728704 *1-17*
101728706 *1-17*
101728708 *1-17*
101728709 *1-17*
101728710 *1-17*
101728711 *1-17*
101728712 *1-17*
1017289 *1-5*
1017310 *1-21*
1017313 *5-3*
1017314 *5-3*
1017315 *5-3*
101731601 *1-15*
101731602 *1-15*
101731604 *1-15*
101731606 *1-15*
101731608 *1-15*
101731609 *1-15*
101731610 *1-15*
101731611 *1-15*
101731612 *1-15*
1017317 *5-3*
1017327 *10-5*
1017328 *10-3*
101737002 *2-3*, *2-5*
1017378 *4-13*, *4-15*
1017380 *4-13*, *4-15*
101738301 *10-3*

INDEX

1017384 *1-19*
101739201 *12-27*
1017400 *4-15*
1017424 *4-13*, *4-15*, *12-27*
1017434 *7-21*
1017435 *7-21*
1017442 *7-19*
1017443 *7-23*
1017444 *7-21*
1017445 *7-21*
1017446 *7-21*
1017447 *7-23*
1017448 *7-5*, *7-17*
101744901 *7-25*
101744902 *7-25*
1017450 *7-25*
101745101 *7-25*
101745102 *7-25*
1017453 *7-25*
1017454 *7-21*
1017455 *7-5*, *7-17*
1017456 *7-7*, *7-19*
101745701 *7-25*
101745702 *7-25*
1017458 *7-19*
1017460 *7-19*
1017461 *8-5*, *8-7*
1017463 *7-17*
1017466 *8-9*
1017471 *7-25*
1017472 *7-23*
1017473 *7-21*
1017474 *7-15*
1017475 *7-15*
1017476 *7-15*
1017486 *7-15*
1017487 *7-23*
1017490 *7-17*
1017500 *7-15*
1017501 *7-25*
1017502 *7-25*
1017503 *7-25*
1017504 *7-23*
1017507 *7-7*, *7-19*
1017508 *7-23*
1017510 *7-25*
1017511 *7-23*
1017513 *7-23*
1017514 *7-23*
101751801 *7-23*
101751802 *7-23*
101751803 *7-23*
101753005 *12-13*
1017653 *6-25*
1017686 *10-5*
1017689 *9-3*, *9-5*
101769302 *2-3*, *2-5*
1017695 *1-19*
1017696 *4-13*, *4-15*
1017699 *6-21*, *12-47*
1017705 *12-15*, *12-23*, *12-45*
1017721 *6-17*
101773301 *7-25*
101773302 *7-25*
101773303 *7-25*
101773304 *7-25*
101773305 *7-25*
101773306 *7-25*
101773307 *7-25*
101773308 *7-25*
101773309 *7-25*
101773310 *7-25*
101773311 *7-25*
1017743 *4-15*, *12-27*
1017748 *1-7*, *1-17*
1017774 *1-11*, *1-21*, *1-23*
1017799 *12-13*
1017814 *1-7*
1017815 *1-7*
1017830 *12-27*
1017853 *6-17*, *12-27*, *12-37*
101788201 *1-15*
101788202 *1-15*
101788204 *1-15*
101788206 *1-15*
101788208 *1-15*
101788209 *1-15*
101788210 *1-15*
101788211 *1-15*
101788212 *1-15*
101791101 *4-3*, *4-5*
101791901 *1-3*
1017936 *1-7*, *1-17*
1017944 *13-3*, *13-5*
1017946 *13-3*
1017947 *13-3*, *13-5*
1017948 *13-3*, *13-5*
1017949 *13-3*, *13-5*
1017950 *13-3*, *13-5*
1017951 *13-3*
1017953 *13-3*, *13-5*
101795701 *12-7*, *12-11*, *12-15*, *12-19*, *12-23*, *12-31*, *12-35*, *12-47*, *12-51*, *12-55*, *12-57*
1017958 *13-3*
1017961 *13-3*
101796201 *4-13*, *4-15*
101796501 *12-15*, *12-23*, *12-45*
101796801 *12-15*, *12-23*, *12-45*
1017976 *1-35*
101797701 *12-15*, *12-23*, *12-47*, *12-57*
101797702 *12-15*, *12-23*, *12-47*, *12-57*
101797801 *12-15*, *12-23*, *12-47*, *12-57*
101799201 *1-21*
101801001 *1-25*, *12-15*, *12-23*, *12-45*, *15-11*, *15-13*
101802101 *12-15*, *12-23*, *12-45*
101802201 *15-3*
101802202 *15-3*
101802203 *15-3*
101802204 *15-5*
101802205 *15-5*
101802206 *15-5*
101802401 *12-43*
101804201 *4-15*
101804301 *4-15*, *8-13*, *8-15*, *12-27*
101805701 *8-13*
101806901 *1-17*
101808401 *16-3*
101809001 *12-27*
101809101 *16-3*
101810801 *12-43*
101811301 *8-15*
101811401 *8-13*
101811501 *8-13*
101811901 *8-13*, *8-15*
101812301 *8-13*, *8-15*
101813001 *8-13*, *8-15*
101813202 *16-3*
101814201 *12-39*
101814301 *15-11*
101814302 *15-13*
101814701 *12-39*
101815501 *4-3*
101815502 *4-3*
101816301 *4-3*
101816501 *4-3*
101816502 *4-3*
101817401 *4-13*, *4-15*
101818801 *4-13*
101819701 *15-3*, *15-11*
101820201 *8-9*
101821501 *8-13*, *8-15*
101822601 *12-27*
101823101 *16-5*
101823201 *4-3*
101823301 *4-3*
101823302 *4-3*
101823801 *4-3*
101823901 *4-3*
101824001 *4-3*
101824002 *4-3*
101824401 *8-3*
101825101 *3-3*, *3-7*, *3-13*
101825102 *3-7*, *3-13*
101825701 *8-15*
101826201 *12-3*, *12-39*
101826301 *6-9*

INDEX

101826401 *6-19*
101827101 *7-27*
101827801 *12-17*, *12-25*
101827802 *12-43*
101828301 *15-3*
101828501 *15-3*, *15-7*, *15-11*, *15-13*
101828601 *12-37*, *15-3*, *15-5*, *15-11*
101828801 *15-3*, *15-5*
101828802 *15-3*, *15-5*
101828901 *15-3*, *15-7*, *15-9*
101828902 *15-3*, *15-7*, *15-9*
101828903 *15-3*, *15-7*
101828904 *15-5*
101828905 *15-5*
101828906 *15-5*
101829001 *15-11*, *15-13*
101829101 *15-11*, *15-13*
101830601 *6-9*, *6-19*, *12-3*, *12-39*
101830701 *6-9*, *6-19*, *12-3*, *12-39*
101831101 *15-3*
101831503 *15-7*
101831504 *15-7*
101831701 *15-7*
101831702 *15-7*
101831801 *16-3*
101831901 *16-3*
101832001 *12-15*, *12-23*, *12-45*
101832101 *7-27*
101832201 *8-11*
101832202 *8-11*
101832301 *8-11*
101832302 *8-11*
101832401 *8-11*
101832402 *8-11*
101832501 *8-11*
101832601 *7-27*
101832701 *7-27*
101832901 *7-27*
101833001 *7-27*
101833101 *7-27*
101833201 *7-27*
101833301 *7-27*
101833401 *10-5*
101833601 *11-3*
101833701 *6-25*, *6-27*
101833902 *10-3*
101833904 *10-3*
101834001 *10-5*
101834502 *6-9*, *6-19*, *12-3*, *12-39*
101834601 *7-27*
101834801 *11-3*
101835601 *1-25*, *1-27*, *12-43*
101836201 *10-5*
101837001 *1-17*, *1-29*, *1-35*
101837101 *8-13*, *8-15*
101837301 *6-5*, *6-13*, *6-27*
101838201 *15-7*, *15-13*
101838301 *15-7*, *15-13*
101838401 *15-7*, *15-9*, *15-13*
101838501 *15-7*
101838601 *15-7*, *15-9*, *15-13*
101838701 *15-7*, *15-11*, *15-13*
101840203 *12-17*, *12-41*
101840901 *1-13*
101841101 *1-13*
101841201 *1-13*
101841202 *1-13*
101841301 *1-13*
101841701 *15-11*
101841801 *15-13*
101841901 *15-11*, *15-13*
101846301 *1-31*
101850301 *8-13*
101851101 *6-9*, *6-19*, *12-39*
101855002 *12-21*
101855801 *6-3*
101855901 *7-27*
101856001 *12-21*
101856101 *12-21*
101856102 *6-7*, *6-15*
101856201 *8-13*
101859301 *9-3*
101859401 *9-5*
101861901 *4-13*, *4-15*, *12-27*
101862001 *4-13*, *4-15*
101865106 *12-31*, *12-35*, *12-51*, *12-55*
101865301 *4-9*
101869001 *4-11*
101869302 *6-25*
101870401 *1-3*
101870501 *5-7*, *5-11*
101870601 *5-7*, *5-11*
101871001 *16-3*
101871901 *4-13*
101872701 *4-11*
101874601 *4-9*, *4-11*
101874901 *6-25*
101875001 *6-25*
101875101 *6-25*
101875201 *6-25*
101875301 *6-25*
101875401 *6-25*
101875501 *6-25*
101875601 *6-25*
101875701 *6-25*
101875802 *6-25*
101876001 *6-25*
101876202 *6-25*
101876301 *6-25*
101876402 *6-25*
101876501 *6-25*
101876901 *5-9*, *5-13*
101877001 *5-9*, *5-13*
101877601 *6-25*
101877701 *6-25*
101878101 *6-25*
101878201 *4-7*, *4-9*
101878302 *5-5*
101879001 *6-25*
101879401 *5-5*
101879501 *5-5*
101879601 *5-5*
101879701 *5-5*
101879801 *5-5*
101879901 *5-5*
101880001 *5-5*
101880101 *5-5*
101880201 *5-5*
101880301 *5-5*
101880901 *1-19*, *1-29*
101881101 *7-5*, *7-17*
101881701 *1-19*, *1-29*, *8-13*, *8-15*
101883002 *12-7*, *12-11*, *12-31*, *12-35*, *12-51*, *12-55*
101884801 *7-27*
101884901 *2-3*, *2-5*
101887101 *16-3*
101887601 *7-3*, *7-15*, *8-9*
101887901 *12-25*
101888501 *1-25*, *1-27*
101888502 *1-25*
101889401 *11-5*
101889901 *11-5*
101890001 *11-5*
101890101 *11-3*
101890201 *11-3*
101890601 *11-3*
101890901 *11-7*
101891001 *11-7*
101891301 *11-3*
101891401 *11-7*
101891501 *11-7*
101891601 *11-5*
101891901 *11-5*
101892001 *11-5*
101892201 *11-5*
101892301 *11-5*
101892401 *11-5*
101892501 *11-5*
101892601 *11-5*
101892701 *11-7*
101893201 *11-5*
101894303 *1-25*, *1-27*
101894901 *12-15*, *12-23*, *12-43*, *12-45*
101895101 *12-27*
101895401 *14-3*
101895501 *14-3*
101895601 *14-3*

INDEX

101895701 *14-3*
101895801 *14-3*
101895901 *14-3*
101896001 *14-3*
101896501 *6-25*
101896901 *8-3*
101897001 *14-3*
101897201 *14-3*
101897401 *14-3*
101897601 *14-3*
101897901 *14-3*
101898001 *6-29*
101900801 *4-3*, *5-15*
101900901 *6-9*
101901201 *12-7*, *12-11*
101901301 *12-7*, *12-11*
101901401 *12-7*, *12-11*
101901501 *12-11*
101902801 *12-7*, *12-11*
101902901 *12-7*, *12-11*
101903001 *12-7*, *12-11*
101903101 *5-9*, *5-13*
101903501 *8-11*
101903601 *14-3*
101903701 *14-3*
101904101 *1-7*, *1-17*
101904402 *12-31*, *12-35*, *12-51*, *12-55*
101904403 *12-31*, *12-35*, *12-51*, *12-55*
101904502 *12-31*, *12-35*, *12-51*, *12-55*
101904503 *12-31*, *12-35*, *12-51*, *12-55*
101904602 *12-31*, *12-35*, *12-51*, *12-55*
101904603 *12-31*, *12-35*, *12-51*, *12-55*
101904702 *12-31*, *12-35*, *12-51*, *12-55*
101904703 *12-31*, *12-35*, *12-51*, *12-55*
101905601 *8-5*, *8-9*
101905901 *8-7*, *8-9*
101906201 *14-3*
101906901 *14-3*
101908101 *12-21*
101908401 *12-21*
101908601 *3-5*
101908701 *12-17*, *12-25*, *12-41*
101908801 *12-31*, *12-35*, *12-51*, *12-55*
101908902 *12-31*, *12-35*, *12-51*, *12-55*
101908903 *12-31*, *12-35*, *12-51*, *12-55*
101909201 *7-5*, *7-17*
101909301 *7-5*, *7-17*
101909401 *7-5*, *7-17*
101909501 *7-5*, *7-17*
101909701 *7-3*
101909901 *12-17*
101909902 *12-25*
101909903 *12-43*
101909904 *12-43*
101910401 *1-11*, *1-21*, *1-23*, *12-17*, *12-25*
101910501 *11-7*
101911003 *12-7*
101911101 *12-7*, *12-11*
101911601 *12-31*, *12-35*, *12-51*, *12-55*
101911701 *12-41*
101912401 *4-13*
101914401 *6-13*, *6-17*, *12-31*, *12-35*, *12-37*, *12-51*, *12-55*, *15-3*, *15-7*, *15-11*, *15-13*
101915201 *3-5*, *3-9*, *3-11*, *3-17*
101915401 *7-11*
101915501 *7-13*
101915601 *7-3*
101915701 *7-5*
101915801 *7-5*
101915901 *7-23*
101916001 *7-25*
101916101 *7-15*
101916201 *7-17*
101916301 *7-17*
101916501 *10-3*
101916701 *6-27*, *10-3*
101917601 *8-13*, *8-15*
101917701 *8-13*
101918401 *2-3*, *2-5*
101918402 *2-3*, *2-5*
101920001 *12-19*
101920101 *12-5*, *12-9*, *12-17*, *12-21*, *12-27*, *12-43*, *13-5*
101921501 *8-13*, *8-15*
101921901 *3-3*, *3-9*, *3-11*, *3-15*
101922101 *14-3*
101922201 *14-3*
101922301 *7-13*
101922302 *7-25*
101922501 *12-21*
101923001 *14-3*
101923201 *14-3*
101923501 *14-3*
101923601 *14-3*
101923701 *14-3*
101923901 *14-3*
101924301 *12-41*
101925701 *8-13*, *8-15*
101926501 *5-17*
101926802 *8-15*
101926803 *8-15*
101927101 *11-3*
101927201 *11-3*
101927501 *11-5*
101927601 *11-5*
101927901 *11-5*
101928001 *11-5*
101928101 *11-5*
101928301 *11-7*
101928701 *11-3*, *14-3*, *16-5*
101929401 *5-17*
101929501 *8-3*
101929801 *10-3*
101930801 *12-31*, *12-35*, *12-51*, *12-55*
101931501 *3-5*, *3-15*
101931601 *12-43*
101932001 *12-5*
101932201 *6-19*, *12-39*
101932401 *12-21*
101932501 *12-21*
101932601 *12-25*
101932701 *12-25*
101932801 *12-5*
101933101 *16-5*
101935301 *5-11*
101935501 *12-3*, *12-39*
101936801 *12-9*, *12-35*, *12-55*
101939901 *6-25*
101942301 *12-5*, *12-17*, *12-21*, *12-43*, *13-5*
101946201 *1-21*, *1-25*, *1-27*, *1-29*
101946901 *12-5*
101949201 *12-5*
101951501 *6-3*
101953001 *4-7*, *4-9*
101953101 *4-7*, *4-9*
101953102 *4-9*
101953103 *4-9*
101953901 *7-3*
101954301 *1-9*, *1-11*, *1-19*, *1-21*, *1-25*, *1-27*, *1-29*
101955001 *5-11*
101955101 *6-17*, *12-37*
101955301 *8-3*
101956201 *15-9*
101956202 *15-9*
101956502 *12-25*
101957101 *6-19*, *12-39*
101957501 *12-43*
101958101 *8-13*
101958201 *15-9*
101958301 *15-9*
101958601 *1-25*, *1-27*
101959902 *3-3*
101960001 *3-13*
101960501 *3-5*, *3-9*, *3-11*, *3-15*
101960601 *3-3*, *3-7*, *3-13*
101962601 *12-43*
101963301 *1-25*, *1-27*
101963401 *1-25*, *1-27*
101963901 *1-25*, *1-27*
101964001 *1-25*, *1-27*
101964601 *3-15*
101965201 *12-17*, *12-25*
101966801 *12-43*
101966901 *4-13*
101968701 *12-19*

INDEX

101968801 *12-43*
101969701 *6-19*, *12-39*
101971101 *12-5*
101971301 *8-13*, *8-15*
101972101 *14-3*
101972201 *14-3*
101972401 *14-3*
101972801 *8-13*, *8-15*
101973101 *8-5*, *8-7*
101973201 *8-5*
101973301 *8-7*
101973401 *8-9*
101973501 *15-9*
101975101 *5-17*
101975201 *5-17*
101976001 *14-3*
101976601 *15-9*
101978001 *12-19*
101978101 *12-19*
101978201 *12-19*
101979101 *6-3*, *12-13*
101980801 *11-5*
101980901 *11-5*
101981001 *11-5*
101984801 *5-3*
101985501 *1-9*
101987402 *6-5*
101987501 *15-9*
101987601 *1-9*
101987701 *8-3*
101987901 *6-17*, *12-37*
101988001 *6-17*, *12-37*
101988002 *6-17*, *12-37*
101988101 *6-17*, *12-37*
101988201 *6-17*, *12-37*
101989901 *12-31*, *12-35*, *12-51*, *12-55*
101990203 *6-13*
101990402 *6-13*
101990701 *6-9*, *6-19*
101990801 *4-7*, *4-9*
101991101 *6-9*, *6-19*
101992601 *6-7*
101992701 *6-15*
101997201 *16-7*
101997202 *16-7*
101997203 *16-7*
101997204 *16-7*
101997205 *16-7*
101997206 *16-7*
101997207 *16-7*
101997209 *16-7*
101997211 *16-7*
101997212 *16-7*
101998201 *1-9*
101998202 *1-9*
101998204 *1-9*
101998205 *1-9*
101998501 *1-9*
102003201 *8-3*
102004001 *5-13*
102022101 *4-3*, *4-7*
102026001 *4-13*, *4-15*
102045901 *6-3*, *11-3*
102061201 *16-7*
102101001 *12-9*
102101101 *12-9*
102162101 *12-11*
102166901 *4-5*, *4-9*
102168701 *3-9*, *3-11*
102169401 *16-5*
102174201 *1-9*
102174202 *1-9*
102174204 *1-9*
102174205 *1-9*
102196601 *12-19*
102197901 *5-13*
102199001 *6-17*
102199601 *12-19*
102235201 *13-3*, *13-5*
102237701 *13-3*
102240102 *13-5*
102240501 *12-25*
102240601 *12-25*
102240801 *12-25*
102241501 *16-5*
102242101 *10-5*
102243402 *16-5*
102244501 *3-15*
102244701 *3-15*
102244801 *3-15*
102248301 *12-9*
102248801 *16-5*
102249901 *3-15*, *16-3*
102250201 *12-13*
102251501 *16-5*
102251901 *13-5*
102259001 *1-3*
102259101 *1-3*
102259801 *12-25*
102263601 *12-19*, *12-25*
102263701 *12-25*
102265501 *13-5*
102265601 *13-5*
102265701 *13-5*
102265901 *13-5*
102266001 *13-5*
102266101 *13-5*
102266501 *12-25*
102266601 *12-21*
102266701 *12-21*
102267001 *13-5*
102271601 *7-23*
102272201 *7-25*
102273101 *12-41*
102273201 *15-5*
102273301 *15-5*
102273401 *15-5*
102273501 *15-5*
102273601 *15-5*
102273701 *15-5*
102273801 *15-5*
102273901 *15-5*
102274001 *15-5*
102278001 *5-3*
102292801 *4-5*, *4-9*, *4-11*
102304701 *7-9*
102304801 *7-21*, *7-23*
102310701 *1-3*, *1-7*, *1-17*
102323101 *4-7*, *4-9*
102323201 *4-7*, *4-9*
102327801 *13-5*
102330901 *16-5*
102336001 *8-11*
102336101 *8-11*
102355301 *6-29*
102430901 *7-25*

A

ac voltage suppressor *15-3*, *15-7*, *15-9*, *15-11*, *15-13*
accelerator cover *4-15*, *12-27*
accelerator pedal *4-13*, *4-15*
accelerator pedal adjustment tool *16-3*
accelerator pedal return spring cup *4-13*
accelerator pivot rod *4-13*, *4-15*
accelerator rod *4-13*
A-connector (starter/generator) *6-25*
adapter, cable (IQDM) *16-5*
adapter, two-way *12-43*
adhesive, guide ring *16-3*
adjuster, hydraulic brake *16-5*
adjusting stud *12-5*
air box *8-13*, *8-15*
air duct *8-13*, *8-15*
air filter *8-13*, *8-15*
ammeter *15-3*, *15-5*, *15-7*, *15-9*, *15-11*, *15-13*
anchor body (brake) *4-5*, *4-11*
anchor piston *4-5*, *4-11*
angle, seat hinge *1-29*
A-plate strap *5-7*, *5-11*
arbor *16-7*
arm
  brake lever *4-5*, *4-11*
  governor lever *11-3*
  pivot *11-3*
  rocker *7-9*, *7-21*
  speed switch *12-5*

INDEX

armature *6-25*, *13-3*, *13-5*
armrest *1-9*
  driver *1-25*
  front *1-21*
  passenger *1-27*
  rear *1-13*, *1-21*
  rear seat *1-31*
assembly
  3-pin plug *13-5*
  3-wire and receptacle *12-5*
  6-pin plug *12-25*
  48-volt motor *13-3*
  ac voltage suppressor *15-3*, *15-7*, *15-9*, *15-11*, *15-13*
  accelerator pedal *4-15*
  armature *6-25*
  armrest, passenger *1-27*
  axle *11-7*, *14-3*
  bearing (steering column) *5-3*
  bolt (float chamber) *8-7*
  brush rigging *13-5*
  carburetor *8-9*
  carburetor (fe290 engine) *8-5*
  carburetor (fe350 engine) *8-7*
  charger case *15-3*, *15-5*, *15-7*, *15-9*, *15-11*, *15-13*
  connecting rod *7-25*
  current limiter *15-9*
  cylinder head *7-9*, *7-21*
  delta a-plate *5-7*, *5-11*
  delta shock and gear support *5-7*, *5-11*
  diode *6-15*, *12-17*, *12-41*
  diode with heatsink film *15-5*
  drive clutch (fe290 engine) *10-3*
  drive clutch (fe350 engine) *10-3*
  drive hub *10-3*
  driven clutch *10-5*
  eccentric (front suspension adjustment) *5-9*, *5-13*
  end shield *13-5*
  fixed face (drive clutch) *10-3*
  float (carburetor) *8-5*, *8-7*
  float chamber *8-5*, *8-7*
  forward/reverse switch *12-13*, *12-21*
  heatsink *15-3*, *15-7*, *15-9*, *15-11*, *15-13*
  hub *5-9*, *5-13*
  idle screw *8-7*
  lever (brake) *4-3*
  moveable face (drive clutch) *10-3*
  moveable face (driven clutch) *10-5*
  pilot air screw *8-5*, *8-7*
  resistor *12-17*, *12-25*, *12-41*
  rod (counterbalance) *7-13*
  screw (float chamber) *8-7*
  seat back *1-23*
  seat bottom *1-9*
  spindle, front suspension *5-9*
  stator shell *13-3*, *13-5*
  steering column *5-3*
  switch brush *12-5*
  taillight *6-21*, *6-23*, *12-47*, *12-57*
  transformer *15-3*, *15-5*, *15-7*, *15-9*, *15-11*, *15-13*
  voltage suppressor *6-13*, *12-31*, *12-35*, *12-37*, *12-51*, *12-55*
  wheel and tire *2-3*, *2-5*
  wiper switch *12-5*
  wire, battery charger *15-3*, *15-5*, *15-7*, *15-9*, *15-11*, *15-13*
  wire, fe290 engine *7-3*
  wire, fe350 engine *7-15*
  wire, multi-step potentiometer *12-5*
  wire, sense lead *12-23*, *12-45*
axle *11-7*, *14-3*
axle shaft seal *14-3*
axle tube *11-7*, *14-3*

B

backing plate (brake) *4-3*, *4-5*, *4-11*
bag rest mat *1-17*
ball bearing, output shaft *6-25*
ball joint *5-7*, *5-11*
ball joint, inner *5-5*
ball joint, left-hand thread *5-5*, *5-11*
ball stud (accelerator pedal) *4-13*
ball stud (shifter lever) *11-3*
ball, steel (shift fork retainer) *11-5*
ball, steel pressure relief *7-7*, *7-19*
band, rpm limiter mount *7-5*, *7-17*
bar
  bus *12-13*
  connecting, footrest *1-13*, *1-31*
  drive *12-9*
  stabilizer *5-19*
barb, vent *8-3*
barrel, plastic *1-3*, *1-15*, *1-17*, *1-25*, *1-27*
base, forward/reverse shifter *6-3*
base, taillight *6-21*, *12-47*
battery cap *12-15*, *12-23*, *12-47*, *12-57*
battery charger with reel, onboard *15-11*, *15-13*
battery charger, PowerDrive *15-3*, *15-5*, *15-7*, *15-9*
battery clamp *6-29*
battery condition indicator *12-39*
battery discharge machine *16-3*
battery hold-down *12-15*, *12-23*, *12-47*, *12-57*
battery insulator *1-17*, *1-29*, *1-35*
battery terminal protector spray *16-3*
battery thermometer *16-3*
battery warning light *12-3*, *12-39*
battery, 12-volt *6-29*
battery, 8-volt *12-15*, *12-23*, *12-47*, *12-57*
bearing
  ball (crankshaft) *7-11*
  ball (motor) *13-3*, *13-5*
  ball, input shaft *11-5*
  ball, output shaft *6-25*
  bronze *12-5*
  crankshaft *7-23*
  differential *14-3*
  idler (drive clutch) *10-3*
  inner axle tube *11-7*
  input gear *14-3*
  intermediate gear *14-3*
  lower pinion *5-5*
  needle *11-5*
  outer axle tube *11-7*
  pivot support *4-13*, *4-15*, *12-27*
  plain (counterbalance rod) *7-13*
  thrust *5-9*, *5-13*
  upper pinion *5-5*
bearing (steering column) *5-3*
bearing and oil seal remover *16-3*
bearing driver set *16-3*
bearing puller *16-3*
bearing puller wedge *16-3*
bearing retainer *13-5*
bearing retainer (motor) *13-3*
bearing retainer (starter/generator) *6-25*
bearing retainer screw *13-3*
bell crank *12-5*
bell crank and shaft *6-7*, *6-15*
belt, drive *10-3*, *10-5*
belt, starter/generator *6-27*, *10-3*
bezel
  headlight *6-17*, *12-37*
  receptacle *12-15*, *12-45*
  taillight *6-21*, *12-47*
bezel, receptacle *12-23*
block
  brake pedal mounting *4-7*
  fuse *6-7*, *6-15*, *12-45*
  terminal *6-17*, *12-37*, *12-43*, *12-45*
  terminal (controller) *12-25*
board, control *15-11*, *15-13*
body
  center *1-15*
  front *1-3*
  mid-center *1-15*
  rear *1-7*, *1-17*
body spacer *1-11*, *1-21*, *1-23*
bolt, brake adjustment *4-5*, *4-11*
bolt, brake cluster mounting *4-3*, *4-5*
bolt, j- *12-23*
boot
  dust *5-5*
  rubber *8-3*

INDEX

steering column *5-3*
tow/run switch *12-21*
box, electrical component *6-7*, *6-15*
bracket
accelerator support *8-11*
adjusting (starter/generator) *6-27*
armrest *1-13*
brake cable guide *5-11*
brake light switch *6-19*, *12-39*
engine shroud *7-3*
fuel gauge/hour meter *6-9*, *6-19*
fuel pump mounting *8-3*
governor cable engine *8-11*
horn *6-17*, *12-37*
mounting *6-17*, *12-37*, *15-11*, *15-13*
mounting (starter/generator) *6-27*
muffler mounting *9-3*, *9-5*
oil filter *7-7*, *7-19*
oil level switch *7-11*, *7-23*
power relay mounting *15-7*, *15-11*, *15-13*
relay mounting *6-15*
retaining *8-15*
rpm limiter *7-5*, *7-17*
seat back mounting *1-27*, *1-29*
seat support *1-19*
snubber *7-27*
stabilizer bar mounting *5-19*
stake side *1-37*
steering column mounting *5-3*
support *8-11*
throttle *8-9*
tow/run switch *12-21*
transmission cable support *6-3*, *11-3*
brake actuator *4-5*, *4-11*
brake adjusting mechanism *4-3*
brake adjustment bolt *4-5*, *4-11*
brake adjustment tool *16-3*
brake cable *4-3*, *4-5*, *4-7*, *4-9*, *4-11*
brake cable clamp *5-11*
brake cable equalizer *4-7*
brake cable guide bracket *5-11*
brake cable hanger *4-3*, *4-5*, *5-15*, *5-17*
brake cluster *4-3*, *4-5*, *4-11*
brake cluster mounting bolt *4-3*, *4-5*
brake drum *4-3*, *4-5*, *4-11*
brake dust cover *4-3*, *4-5*, *4-11*
brake lever arm *4-5*, *4-11*
brake pedal *4-7*, *4-9*
brake pedal adjustment tool *16-3*
brake pedal mounting block *4-7*, *4-9*
brake pedal pad *4-7*
brake pedal stop bumper *4-7*
brake pedal tension tool *16-3*
brake shoe *4-3*, *4-5*, *4-11*
brake spring *4-3*, *4-5*, *4-11*
breaker
circuit, 10-amp *15-7*, *15-9*, *15-13*
circuit, 15-amp *15-3*, *15-5*, *15-11*
breather, transaxle case *11-3*, *14-3*
bronze bushing *5-9*, *5-13*, *6-3*, *6-7*, *6-15*
bronze spindle bushing *5-9*, *5-13*
brush *6-25*, *13-3*, *13-5*
brush connector *6-25*
brush holder *6-25*
brush holder screw *13-3*
brush inspection port cover *6-25*
brush rigging *13-3*
brush spring *6-25*, *12-5*, *13-3*, *13-5*
bulb, halogen *6-17*, *12-37*
bulb, taillight *6-21*, *6-23*, *12-47*, *12-57*
bumper
brake pedal stop *4-7*
front *1-3*
guard *1-13*, *1-31*
jounce *5-15*
long seat *1-29*
motor *13-3*, *13-5*
mount *5-15*
rear *1-33*
return spring *4-13*, *4-15*
rubber *1-11*, *1-35*, *4-9*
seat *1-19*, *1-25*, *1-27*
wiper switch *12-5*
bus bar *12-13*
bushing
bronze *5-9*, *5-13*, *6-3*, *6-7*, *6-15*
bronze spindle *5-9*, *5-13*
drive clutch *10-3*
insulator *13-3*, *13-5*
nylon *1-11*, *1-23*
snap *12-41*
stabilizer bar *5-19*
steel *1-35*, *5-9*, *5-13*, *5-15*, *5-17*
strain relief *15-3*, *15-5*, *15-7*, *15-9*, *15-11*, *15-13*
urethane *1-35*, *5-7*, *5-9*, *5-11*, *5-13*, *5-15*, *5-17*
button, choke *8-13*
button, horn *6-19*, *12-39*

C

cable
accelerator *8-11*
accelerator, snap-in *8-11*
brake *4-3*, *4-5*, *4-7*, *4-9*, *4-11*
choke *8-15*
governor *8-11*
governor, snap-in *8-11*
IQDM *16-5*
retainer *6-3*
transmission *6-3*
calibration test module *16-3*
cam (driven clutch) *10-5*
cam installation tool *16-3*
cam, electrical box *6-7*, *6-15*
cam, neutral lock-out *6-3*
camshaft *7-11*, *7-23*
cap
adjustment bolt *4-5*, *4-11*
battery *12-15*, *12-47*, *12-57*
battery (4-port) *12-23*
corner *1-25*, *1-27*, *1-29*
dust *12-21*
fuel tank *8-3*
key switch *6-9*, *6-19*, *12-3*, *12-39*
seat back *1-11*, *1-21*, *1-23*, *1-27*, *1-29*
carburetor (fe290 engine) *8-5*, *8-9*
carburetor (fe350 engine) *8-7*, *8-9*
carburetor gasket *8-9*
carburetor insulator *8-9*
card, safety first *16-5*
carrier, wiper switch arm *12-5*
case
charger *15-3*, *15-5*, *15-7*, *15-9*, *15-11*, *15-13*
forward/reverse switch *12-21*
gear *11-3*, *14-3*
gear carrier *11-7*
rocker arm *7-9*, *7-21*
wiper switch *12-5*
center body *1-15*
charger case *15-3*, *15-5*, *15-7*, *15-9*, *15-11*, *15-13*
charger, PowerDrive battery *15-3*, *15-5*, *15-7*, *15-9*
choke button *8-13*
choke cable *8-15*
choke lever *8-13*, *8-15*
choke lever guide *8-13*
choke positioner *8-13*
choke valve *8-13*, *8-15*
circlip, type-e *7-21*
circuit breaker, 10-amp *15-7*, *15-9*, *15-13*
circuit breaker, 15-amp *15-3*, *15-5*, *15-11*
clamp
battery *6-29*
brake cable *5-11*
cable retaining *8-11*
forward/reverse shifter *6-3*
hose *8-3*, *8-9*
hose (air intake) *8-13*, *8-15*
muffler *9-3*, *9-5*
plastic *8-3*
wire *7-5*
clamp screw *13-3*, *13-5*
clevis, upper delta *5-9*, *5-13*
clip, body keeper *1-7*, *1-17*

INDEX

clip, scorecard *5-3*
cluster, brake *4-3*, *4-5*, *4-11*
clutch alignment tool *16-3*
clutch tool kit *16-3*
clutch, drive (fe290 engine) *10-3*
clutch, drive (fe350 engine) *10-3*
clutch, driven *10-5*
coil, field *6-25*
coil, ignition *7-5*, *7-17*
collar (axle shaft) *11-7*
collet (cylinder head) *7-9*, *7-21*
column, steering *5-3*
communication display module *16-3*
commutator end bell *6-25*
component mounting plate *12-17*, *12-25*
compression gauge *16-3*
compression mount *5-19*
compression spring *8-13*
compressor, piston ring *16-5*
compressor, valve spring *16-7*
computer, onboard *12-17*, *12-25*, *12-43*
conduit, potentiometer *12-27*
connecting bar, footrest *1-13*, *1-31*
connecting rod *7-25*
connecting rod (crankshaft) *7-13*, *7-25*
connector
  4-pin *12-21*
  IQ controller *12-25*
connector, 3-pin *12-43*
connector, cord (oil level sensor) *7-11*, *7-23*
continuity tester *16-5*
control board *15-11*, *15-13*
controller, 48-volt (250-amp) *12-25*
controller, 48-volt (300-amp) *12-17*, *12-41*
cord connector (oil level sensor) *7-11*, *7-23*
cord housing (front seat) *1-25*, *15-11*, *15-13*
cord, dc (charger) *15-3*, *15-5*, *15-7*, *15-9*, *15-11*, *15-13*
cordset, ac *15-3*, *15-5*, *15-7*, *15-9*, *15-11*, *15-13*
corner cap *1-25*, *1-27*, *1-29*
counterbalance guide shaft *7-13*, *7-25*
counterbalance weight *7-13*, *7-25*
cover
  accelerator *4-15*, *12-27*
  brake dust *4-3*, *4-5*, *4-11*
  brush inspection port *6-25*
  component *12-43*
  controller *12-25*
  crankcase *7-11*, *7-23*
  dust *5-9*, *5-13*
  electrical component box *6-7*, *6-15*
  fuse block *12-45*
  gear case *11-7*
  oil pump *7-7*, *7-19*
  screw head *1-5*
  seat back support *1-25*
  seat bottom *1-9*
  steering column *5-3*
  vinyl seat back *1-11*, *1-21*, *1-23*, *1-25*, *1-27*, *1-29*
  vinyl seat bottom *1-11*, *1-19*, *1-23*, *1-25*, *1-27*, *1-29*
  wiper switch *12-5*
crank, bell *12-5*
crankcase *7-13*, *7-25*
crankcase cover *7-11*
crankcase vent tube *8-9*
crankshaft *7-13*, *7-25*
crankshaft seal *7-11*
crankshaft shim *7-13*, *7-25*
cup, accelerator pedal return spring *4-13*
cup, spring *4-15*
current limiter *15-9*
cushion, shock absorber *5-15*, *5-17*
cutter, valve seat *16-7*
cylinder head *7-9*, *7-21*

D

damper, rpm limiter *7-5*, *7-17*
dash, driver side *1-5*
dash, passenger side *1-5*
dc cord (charger) *15-3*, *15-5*, *15-7*, *15-9*, *15-11*, *15-13*
decal
  battery danger *3-5*, *3-9*, *3-11*, *3-15*
  bed bolt warning *3-17*
  bed load *1-37*
  bed load warning *3-17*
  component cover caution *3-15*
  crush area *3-17*
  driver/passenger warning *3-3*, *3-7*, *3-13*
  electrical component cover *3-5*, *12-25*
  frame ground and governor warning *3-5*, *3-9*, *3-11*, *3-17*
  gasoline warning *3-5*, *3-9*, *3-11*, *3-15*
  Ingersoll-Rand *3-3*, *3-9*, *3-11*, *3-15*
  key switch *3-3*, *3-7*, *3-13*
  motor braking *3-3*
  no ground *3-15*
  operating instructions *3-3*, *3-7*, *3-13*
  passenger warning *3-3*, *3-7*, *3-11*, *3-17*
  potentiometer caution *3-5*
  rotating parts and hot manifold warning *3-5*, *3-9*, *3-11*, *3-15*
  tow/run switch *3-5*
  TransPorter *3-15*
  vehicle loading *3-13*
  Villager *3-11*
  wiper switch warning *12-5*
delta a-plate *5-7*, *5-11*
delta shock and gear support *5-7*, *5-11*
differential bearing *14-3*
differential gear *11-7*, *14-3*
differential gear case *11-7*
differential housing *14-3*
differential idler gear *11-7*, *14-3*
differential pin *11-7*, *14-3*
diode assembly *6-15*, *12-17*, *12-41*
dipstick *7-3*, *7-15*
door, access *1-7*, *1-17*
double lip seal *5-9*
drag link, rack and pinion *5-5*
drain plug *7-19*
drain plug (crankcase) *7-7*
drink holder *1-5*
drive bar *12-9*
drive belt *10-3*, *10-5*
drive clutch (fe290 engine) *10-3*
drive clutch (fe350 engine) *10-3*
drive clutch button *10-3*
drive clutch holder tool *16-3*
drive clutch hub puller *16-3*
drive clutch puller *16-3*
drive hub *10-3*
driven clutch *10-5*
driven clutch cam puller *16-3*
driven clutch puller plug *16-3*
driver, drive clutch *10-3*
drum, brake *4-3*, *4-5*, *4-11*
dry moly lubricant *16-5*
duct, air *8-13*, *8-15*
dust boot *5-5*
dust cap *12-21*
dust cover *5-9*, *5-13*
dust seal *5-7*, *5-11*

E

8-volt battery *12-15*, *12-23*, *12-47*, *12-57*
eccentric (front suspension adjustment) *5-9*, *5-13*
electrical component box *6-7*, *6-15*
end bell, commutator *6-25*
end bell, output shaft *6-25*
end shield *13-3*, *13-5*
engine shroud *7-3*, *7-15*
engine valve spring *7-9*, *7-21*
engine, fe290 ohv gasoline *7-3*
engine, fe350 ohv gasoline *7-15*
equalizer and pivot limiter *4-9*
equalizer rod *4-7*, *4-9*
equalizer, brake cable *4-7*
exhaust system *9-3*, *9-5*
exhaust valve *7-9*, *7-21*

F

4-pin plug and wedge lock *12-21*

INDEX

4-pin receptacle and wedge lock *12-21*
48-volt motor, 3.10-hp *13-3*
48-volt motor, 3.20-hp *13-5*
48-volt solenoid *12-17*, *12-25*, *12-41*
fan housing *7-3*, *7-15*
fan shroud *7-3*, *7-15*
fan, flywheel *7-5*, *7-17*
fastener, plastic barrel *1-13*, *1-31*
fe290 ohv gasoline engine *7-3*
fe350 ohv gasoline engine *7-15*
fender extrusion *1-3*
fender, inner *1-7*, *1-17*
fender, rear *1-33*
field coil (starter/generator) *6-25*
fill plug *14-3*
filter
  air *8-13*, *8-15*
  fuel *8-3*
  oil *7-7*, *7-19*
fitting, grease *5-9*, *5-13*
fitting, thread-forming grease *5-5*, *5-7*, *5-11*
fixed face (drive clutch) *10-3*
fixed face (driven clutch) *10-5*
float (carburetor) *8-5*, *8-7*
float chamber *8-5*, *8-7*
float chamber gasket *8-5*
floor mat *1-5*
flywheel *7-5*, *7-17*
flywheel fan *7-5*, *7-17*
flywheel puller *16-5*
footrest mat *1-13*, *1-31*
footrest, rear *1-13*, *1-31*
fork, shift *11-5*
forward/reverse bell crank *6-3*
forward/reverse cam spring *6-3*
forward/reverse handle *6-3*, *12-13*
forward/reverse shifter *6-3*
forward/reverse switch *12-13*, *12-21*
forward/reverse switch case *12-21*
front body *1-3*
front spring retainer plate *5-9*
f-terminal insulator *6-25*
fuel filter *8-3*
fuel gauge/hour meter *6-9*, *6-19*
fuel impulse pump *8-3*
fuel line *8-3*
fuel pickup tube valve *8-3*
fuel strap, front *8-3*
fuel strap, rear *8-3*
fuel tank *8-3*
fuse
  10-amp *6-7*, *6-15*
  20-amp *6-15*, *12-45*
  3/8-amp *12-15*, *12-23*, *12-45*
  battery charger *15-3*, *15-5*, *15-7*, *15-9*, *15-11*, *15-13*
  block *6-7*, *6-15*
fuse and receptacle *12-15*, *12-45*
fuse block *12-45*

G

gasket
  carburetor *8-9*
  controller *12-25*
  crankcase cover *7-11*, *7-23*
  drain plug *7-7*, *7-19*, *11-3*
  exhaust *9-3*, *9-5*
  fe290 *7-9*
  float chamber *8-5*, *8-7*
  head *7-9*, *7-21*
  heat transfer *12-43*
  insulator *8-9*
  liquid *14-3*, *16-5*
  liquid (transaxle case) *11-3*
  oil pump *7-7*, *7-19*
  plug *14-3*
  rocker arm case *7-9*, *7-21*
  seat *1-9*, *1-19*
  taillight *6-23*, *12-57*
  throttle bracket *8-9*
gasket kit *7-21*, *7-23*
gauge, compression *16-3*
gauge, fuel *6-9*, *6-19*
gear
  case *11-3*, *14-3*
  cluster idler *11-5*
  differential *11-7*, *14-3*
  differential idler *11-7*, *14-3*
  helical (crankshaft) *7-13*, *7-25*
  input *11-5*
  intermediate *14-3*
  output *11-7*, *14-3*
  spur (crankshaft) *7-13*, *7-25*
  spur (transaxle) *11-5*
gear yoke *16-5*
governor *11-5*
governor cable *8-11*
governor guard *8-9*
governor lever arm *11-3*
governor shaft installation tool *16-5*
grease fitting *5-5*, *5-9*, *5-11*, *5-13*
grip, pencil *5-3*
grommet
  5/8 *12-43*
  choke cable *8-15*
  flywheel *7-5*, *7-17*
  insulation *8-3*
  split *12-5*
guard, bumper *1-13*, *1-31*
guard, governor *8-9*
guide
  choke lever *8-13*
  oil (transaxle) *11-5*
  steering rack *5-5*
  valve *7-9*, *7-21*
  valve seat cutter *16-7*
guide ring adhesive *16-3*

H

handle, forward/reverse *6-3*, *12-13*
handle, Powerdrive 2 battery charger *15-5*
handrail, first seat *1-25*
handrail, rear seat *1-13*, *1-31*
hanger, brake cable *4-3*, *4-5*, *5-15*, *5-17*
hardware, terminal (starter/generator) *6-25*
harness retainer *6-9*
harness, wire
  gasoline *6-5*, *6-13*
  headlight *6-17*, *12-37*
  IQ System *12-19*
  lighting *12-31*, *12-35*, *12-51*, *12-55*
  power *12-31*, *12-35*, *12-51*, *12-55*
  PowerDrive System 48 *12-7*, *12-11*
head gasket *7-9*
headlight *6-17*, *12-37*
heat shield *1-17*
heat shrink *15-11*, *15-13*
heatsink *15-3*, *15-5*, *15-7*, *15-9*, *15-11*, *15-13*
helical gear (crankshaft) *7-13*
hinge
  long *1-11*, *1-23*
  seat *1-29*
  short *1-11*, *1-23*
hold-down, battery *12-15*, *12-23*, *12-47*, *12-57*
holder, drink *1-5*
horn *6-17*, *12-37*
horn button *6-19*, *12-39*
hose clamp *8-3*, *8-9*
hose clamp (air intake) *8-13*, *8-15*
hose, intake *8-13*, *8-15*
hour meter *6-9*, *6-19*
housing
  cord (front seat) *1-25*, *15-11*, *15-13*
  differential *14-3*
  fan *7-3*, *7-15*
  female 3-wire *13-5*
  field coil (starter/generator) *6-25*
  potentiometer *12-27*
  taillight *6-23*, *12-57*
hub *5-9*, *5-13*
hub, drive *10-3*
hub, synchronizer clutch *11-5*
hydraulic brake adjuster *16-5*
hydraulic lifter *7-23*
hydrometer *16-5*

INDEX

I

idle screw *8-5*, *8-7*
ignition coil *7-5*, *7-17*
indicator, battery condition *12-39*
input gear bearing *14-3*
input shaft *11-5*, *14-3*
input shaft oil seal *11-5*, *14-3*
insert, synchronizer *11-5*
insert, wood *1-9*, *1-11*, *1-19*, *1-23*, *1-27*, *1-29*
insulation, rear cargo bed *1-35*
insulator
- battery *1-17*, *1-29*, *1-35*
- carburetor *8-9*
- f-terminal *6-25*
- gasket *8-9*

insulator bushing *13-3*
intake hose *8-13*, *8-15*
intake seal *8-13*, *8-15*
intake valve *7-9*, *7-21*
intermediate gear *14-3*
internal retaining ring pliers *16-5*
IQ display module (IQDM) *16-5*

J

j-bolt *12-15*, *12-23*
jet, main *8-5*, *8-7*
jet, pilot *8-5*, *8-7*
joint
- ball *4-7*, *5-7*, *5-11*, *6-3*
- compound steering *5-3*
- inner ball *5-5*
- left-hand thread ball *5-5*, *5-11*
- spring-loaded ball *4-13*

K

key
- crankshaft *7-13*
- driven clutch *10-5*
- flywheel *7-5*, *7-17*
- square *10-5*
- transmission shaft *11-5*
- vehicle (pair) *6-9*, *6-19*, *12-3*, *12-39*
- woodruff *6-25*, *11-3*

key (crankshaft) *7-25*
key switch *6-9*, *6-19*, *12-3*, *12-39*
kingpin *5-9*
kingpin wave washer *5-9*, *5-13*
kingpin, front suspension *5-13*
kit
- 3-pin plug *12-5*, *12-9*, *12-17*, *12-27*, *12-43*, *13-5*
- 3-pin plug and wedge lock *12-21*
- 3-pin receptacle *12-5*, *12-17*, *12-27*
- 3-pin receptacle and wedge lock *12-21*
- 3-wire plug *12-51*
- 4-pin plug and wedge lock *12-21*
- 4-pin receptacle and wedge lock *12-21*
- 6-pin plug *12-25*
- 6-pin receptacle *12-25*
- accelerator pivot rod *4-13*, *4-15*
- anchor body (brake) *4-5*, *4-11*
- bearing and magnet *13-5*
- brake actuator *4-5*
- brake cable *4-3*, *4-5*, *4-7*, *4-11*
- brake pedal *4-7*
- brake pedal adjustment tool *16-3*
- differential gear case *11-7*
- drink holder *1-5*
- drive clutch weight *10-3*
- driven clutch button *10-5*
- equalizer and pivot limiter *4-9*
- fuse and receptacle *12-23*
- gasket *7-9*
- gasket (engine) *7-21*, *7-23*
- hardware, taillight *6-21*, *12-47*
- IQ controller connector *12-25*
- IQ display module (IQDM) *16-5*
- MCOR conversion *12-9*
- park brake latch *4-7*, *4-9*, *4-13*, *4-15*
- park brake pedal *4-7*
- pulley nut and screw *6-25*
- rebuild, fuel impulse pump *8-3*
- resistor assembly *12-5*
- reverse buzzer *6-9*, *6-17*, *6-21*, *6-23*
- shock absorber cushion *5-15*, *5-17*
- shock absorber, rear *5-15*, *5-17*
- shoe retainer *4-3*, *4-5*, *4-11*
- snap washer *1-5*
- stake side *1-37*
- steering column rebuild *5-3*
- tune-up *16-7*

knob, light switch *6-19*, *12-39*

L

latch, park brake *4-7*, *4-9*, *4-13*, *4-15*
latch, wire *8-13*, *8-15*
lead wire *7-5*, *7-17*
leaf spring, tapered *5-9*
lens, headlight *6-17*, *12-37*
lens, taillight *6-21*, *6-23*, *12-47*, *12-57*
lever
- actuator *4-15*
- brake *4-3*
- choke *8-13*, *8-15*
- potentiometer *12-27*
- shifter *11-3*
- transmission shifter *11-3*

lifter, hydraulic *7-23*
light switch *6-19*
light switch knob *6-19*
light, battery warning *12-3*, *12-39*
light, low oil warning *6-9*, *6-19*
limit switch *6-3*, *6-7*, *6-15*, *6-19*, *12-5*, *12-13*, *12-27*
limiter
- rpm *7-17*
- rpm, ohv *7-5*
- voltage *6-17*, *12-43*

line, fuel *8-3*
line, vent *8-3*, *8-9*
link, rack and pinion drag *5-5*
link, stabilizer bar *5-19*
liquid gasket *14-3*, *16-5*
lower pinion bearing *5-5*
lubricant, dry moly *16-5*
lubricant, moly-teflon *16-5*
lug nut *2-3*, *2-5*
lug stud *5-9*, *5-13*, *11-7*, *14-3*

M

magnet *13-5*
magnetic plug *14-3*
main jet *8-7*
mat
- bag rest *1-9*, *1-17*
- floor *1-5*
- footrest *1-13*, *1-31*

MCOR (motor controller output regulator) *12-9*
mechanism, brake adjusting *4-3*
meter, hour *6-9*, *6-19*
meter, volt ohm *16-7*
module, calibration test *16-3*
module, communication display *16-3*
moly-teflon lubricant *16-5*
motor
- 48-volt IQ *13-5*

motor bumper *13-3*, *13-5*
motor, 48-volt *13-3*
mount
- bumper *5-15*
- compression *5-19*
- seat back bracket *1-27*

mounting block, brake pedal *4-7*
mounting bracket *15-11*, *15-13*
mounting bracket (starter/generator) *6-27*
mounting bracket, steering column *5-3*
mounting plate *1-33*
mounting plate (engine) *7-27*
moveable face (drive clutch) *10-3*
moveable face (driven clutch) *10-5*
muffler clamp *9-3*

N

nameplate, Club Car *1-3*
neutral lock-out cam *6-3*

INDEX

nozzle, main (fe290 engine) *8-5*
nozzle, main (fe350 engine) *8-7*
nut
  key switch *6-9*, *6-19*, *12-3*, *12-39*
  lug *2-3*, *2-5*, *5-13*
  slab base “T” *1-3*
nylon bushing *1-11*, *1-23*

O

oil filler tube *7-3*, *7-15*
oil filter *7-19*
oil filter screen *7-11*
oil level sensor *7-11*, *7-23*
oil pump and rotor *7-7*, *7-19*
oil seal *7-25*
oil seal (crankshaft) *7-13*, *7-23*
oil warning light, low *6-9*, *6-19*
onboard computer *12-17*, *12-43*
o-ring
  counterbalance shaft *7-13*, *7-25*
  oil filter mount *7-7*, *7-19*
  oil level sensor *7-11*, *7-23*
  rocker case hardware *7-9*, *7-21*
output gear *11-7*, *14-3*

P

package, brush *6-25*, *13-3*
package, hub bearing *5-9*, *5-13*
pad
  accelerator *4-13*
  accelerator pedal *4-15*
  brake pedal *4-7*, *4-9*
  park brake *4-7*, *4-9*
  spring *5-15*, *5-17*
paint, touch-up *16-7*
panel, center dash *1-5*
panel, rear seat frame *1-29*
park brake latch *4-7*, *4-9*, *4-13*, *4-15*
park brake pedal *4-7*, *4-9*
park brake ratchet *4-13*, *4-15*
park brake rod sleeve *4-7*
park brake torsion spring *4-7*
pawl *4-7*
pedal
  accelerator *4-13*, *4-15*
  brake *4-7*, *4-9*
  park brake *4-7*, *4-9*
pencil grip *5-3*
pilot air screw *8-5*, *8-7*
pilot jet *8-5*, *8-7*
pin
  crankcase cover locating *7-11*
  differential *11-7*, *14-3*
  equalizer pivot *4-9*
  governor cable clevis *8-11*
  head locating *7-9*
  hinge, long *1-11*, *1-23*
  piston *7-13*, *7-25*
  roll (shifter lever) *11-3*
pinion, steering *5-5*
pipe, intake *8-9*
piston *7-13*, *7-25*
piston pin *7-13*, *7-25*
piston pin retaining ring *7-13*, *7-25*
piston ring compressor *16-5*
piston ring pliers *16-5*
piston ring set *7-13*, *7-25*
piston, anchor *4-5*, *4-11*
pivot arm *11-3*
pivot support bearing *4-13*, *4-15*
plastic clamp *8-3*
plate *7-21*
  backing (brake) *4-3*, *4-5*, *4-11*
  body hinge *1-7*, *1-17*
  body kick *1-7*, *1-17*
  component mounting *12-17*, *12-25*
  flywheel fan *7-5*, *7-17*
  front spring retainer *5-9*, *5-13*
  heatsink *15-5*
  mounting *1-33*, *12-41*
  mounting (engine) *7-27*
  oil filter screen *7-11*, *7-23*
  oil pump *7-7*, *7-19*
  oil valve *7-9*
  receptacle backing *1-25*, *12-15*, *12-23*, *12-45*, *15-11*, *15-13*
  scorecard *5-3*
  seat hinge *1-9*, *1-15*, *1-19*, *1-29*
  spring mounting *5-7*, *5-11*
  thrust *11-5*, *11-7*
  thrust (idler gear) *14-3*
pliers
  internal retaining ring *16-5*
  piston ring *16-5*
  retaining ring *16-5*
plug
  3-pin *12-5*, *12-9*, *12-17*, *12-43*, *13-5*
  3-wire *12-31*, *12-35*, *12-51*, *12-55*
  6-pin *12-25*
  cap *7-5*, *7-17*
  drain *7-19*
  drain (crankcase) *7-7*
  drain (transaxle) *11-3*
  drive clutch *10-3*
  driven clutch puller *16-3*
  fill *14-3*
  filter bracket *7-7*
  magnetic *14-3*
  spark (ohv) *7-5*, *7-17*
plug gasket *14-3*
pole set (starter/generator) *6-25*
positioner, choke *8-13*
potentiometer housing *12-27*
potentiometer lever *12-27*
power relay *15-3*, *15-5*, *15-7*, *15-11*, *15-13*
PowerDrive battery charger *15-3*, *15-5*, *15-7*, *15-9*
press weldment *16-3*
protector spray, battery terminal *16-3*
protector, wiper switch resistor *12-5*
puller
  bearing *16-3*
  drive clutch *16-3*
  drive clutch hub *16-3*
  driven clutch cam *16-3*
  flywheel *16-5*
  seal *16-5*
pulley (starter/generator) *6-25*
pulley nut and screw (starter/generator) *6-25*
pump cover (oil) *7-7*, *7-19*
pump, fuel impulse *8-3*
pump, oil and rotor *7-7*, *7-19*
push rod *7-9*, *7-21*

R

rack and pinion drag link *5-5*
rack, steering *5-5*
ratchet, park brake *4-13*, *4-15*
reamer, valve guide *16-7*
rear body *1-7*, *1-17*
rear footrest *1-13*, *1-31*
rear seat frame panel *1-29*
receptacle
  3-pin *12-5*, *12-17*, *12-27*
  3-wire *12-5*
  6-pin *12-25*
  AC cord *15-9*
receptacle (fuse) *12-23*
receptacle backing plate *12-23*
receptacle bezel *12-15*, *12-23*, *12-45*
reel, retractable cord *15-11*, *15-13*
regulator, motor controller output (MCOR) *12-9*
regulator, voltage *6-15*
relay
  48-vdc power *15-3*, *15-5*, *15-7*, *15-9*, *15-11*, *15-13*
  brake light *12-37*
  electrical component box *6-15*
remover, bearing and oil seal *16-3*
resistor *12-25*
resistor assembly *12-17*, *12-41*
retainer
  bearing *13-5*
  bearing (motor) *13-3*
  bearing (starter/generator) *6-25*

INDEX

- cable *6-3*
- harness *6-9*
- headlight *6-17*, *12-37*
- push on *12-39*
- shock absorber cushion *5-15*, *5-17*
- spiral ring *10-3*
- spring *4-13*, *4-15*, *5-15*
- spring (drive clutch) *10-3*
- valve spring *7-9*, *7-21*

retaining ring (drive clutch) *10-3*
retaining ring (driven clutch) *10-5*
retaining ring (steering column) *5-3*
retaining ring pliers *16-5*
retractable cord reel *15-11*, *15-13*
return spring *4-15*, *8-13*, *8-15*
return spring bumper *4-13*, *4-15*
reverse buzzer *6-9*, *6-17*, *6-21*, *6-23*, *12-3*, *12-37*, *12-47*, *12-57*
rigging, brush *13-3*, *13-5*
rim, wheel *2-3*, *2-5*
ring
- C-type stop *5-5*
- piston (set) *7-13*, *7-25*
- piston pin retaining *7-13*, *7-25*
- retaining (drive clutch) *10-3*
- retaining (driven clutch) *10-5*
- retaining (steering column) *5-3*
- retaining (steering gear box) *5-5*
- snap *5-5*, *11-3*
- spiral back-up *10-3*
- synchronizer *11-5*

rocker arm *7-9*, *7-21*
rod
- accelerator pivot *4-13*
- battery hold-down *12-47*, *12-57*
- connecting *7-25*
- connecting (crankshaft) *7-13*, *7-25*
- counterbalance *7-13*
- equalizer *4-7*, *4-9*
- push *7-9*, *7-21*
- shift *11-5*
- tie *5-7*, *5-11*

rod and pawl *4-7*, *4-9*
rpm limiter *7-5*, *7-17*
rubber boot *8-3*

S

6-pin plug *12-25*
6-pin receptacle *12-25*
safety first card *16-5*
scorecard clip *5-3*
scorecard plate *5-3*
screen, oil filter *7-11*, *7-23*
screw
- bearing retainer *13-3*, *13-5*
- brush holder *13-3*
- clamp *13-3*, *13-5*
- idle *8-7*
- idler *8-5*
- lens *6-23*
- pilot air *8-5*, *8-7*
- pole piece (starter/generator) *6-25*
- valve clearance adjuster *16-7*

seal
- bed *1-35*
- crankshaft *7-11*
- double lip *5-9*, *5-13*
- dust *5-7*, *5-11*
- dust (steering gear box) *5-5*
- dust, steering pinion *5-5*
- intake *8-13*, *8-15*
- oil *7-25*
- oil (axle shaft) *11-7*
- oil (crankshaft) *7-13*, *7-23*
- oil (governor pivot) *11-3*
- oil (shifter shaft) *11-3*
- oil, axle shaft *14-3*
- oil, input shaft *11-5*, *14-3*
- valve *7-9*, *7-21*

seal puller *16-5*
seat
- bearing *5-3*
- spring *7-9*, *7-21*
- valve *7-7*

seat back *1-11*, *1-21*, *1-23*, *1-25*, *1-27*, *1-29*
seat back support *1-11*, *1-23*
seat bottom *1-9*, *1-11*, *1-19*, *1-23*, *1-25*, *1-27*, *1-29*
seat bottom cover *1-9*
seat hinge plate *1-9*
seat support *1-11*, *1-23*
seat support panel *1-25*, *1-27*
sensor, motor speed *13-5*
sensor, oil level *7-11*, *7-23*
set, pole *6-25*
shackle, rear spring *5-15*, *5-17*
shaft
- counterbalance guide *7-13*, *7-25*
- input *11-5*, *14-3*
- rocker arm *7-9*, *7-21*
- shifter *11-3*
- steering column *5-3*

shield, end *13-3*, *13-5*
shield, heat *1-17*
shift fork *11-5*
shift rod *11-5*
shifter lever *11-3*
shifter shaft *11-3*
shifter, forward/reverse *6-3*
shim
- camshaft *7-23*
- crankshaft *7-13*, *7-25*
- tilt bed pivot *1-35*
- wiper switch *12-5*

shock absorber cushion *5-15*, *5-17*
shock absorber, front *5-7*, *5-11*
shock absorber, rear *5-15*, *5-17*
shoe bake *4-3*, *4-11*
shoe retainer *4-3*, *4-5*, *4-11*
shoe, brake *4-5*
shrink, heat *15-11*, *15-13*
shroud, engine *7-3*, *7-15*
shroud, fan *7-3*, *7-15*
side bumper guard trim *1-3*
sleeve
- delta a-plate *5-7*, *5-11*
- park brake rod *4-7*, *4-9*
- synchronizer *11-5*
- transaxle *11-5*

slide switch, 4-position *15-7*, *15-9*, *15-13*
snap ring *5-5*
snubber *7-27*
snubber bracket *7-27*
solenoid, 12-volt *6-7*, *6-15*
solenoid, 48-volt *12-17*, *12-25*, *12-41*
spacer
- 1/2 (inner fender) *1-7*
- 1-7/8 (inner fender) *1-7*
- accelerator pivot rod *4-13*
- battery terminal bolt *6-29*
- body *1-11*, *1-21*, *1-23*
- crankshaft *7-13*
- engine *7-27*
- equalizer *4-9*
- fixed face shaft *10-3*
- overload bumper *5-15*
- park brake *4-7*, *4-9*
- stabilizer bar *5-19*

spanner wrench *16-5*
spark plug (ohv) *7-5*, *7-17*
speed switch arm *12-5*
spindle, front suspension *5-9*, *5-13*
spray, battery terminal protector *16-3*
spring
- accelerator pedal retainer *4-13*
- brake *4-3*, *4-5*, *4-11*
- brake return *4-9*
- brush *6-25*, *13-3*, *13-5*
- compression *5-3*, *8-13*
- drive button *10-3*
- drive clutch *10-3*
- engine valve *7-9*, *7-21*
- forward/reverse cam *6-3*
- oil pressure relief *7-7*, *7-19*
- park brake torsion *4-7*, *4-9*
- rear leaf *5-15*, *5-17*
- return *4-13*, *4-15*, *8-13*, *8-15*

INDEX

- shift fork retainer *11-5*
- synchronizer *11-5*
- tapered compression *5-3*
- tapered leaf *5-9*, *5-13*
- throttle return *8-9*
- wiper switch brush *12-5*
- yoke *5-5*

spring cup *4-15*
spring mounting plate *5-7*, *5-11*
spring retainer *4-15*, *5-15*
spring seat *7-9*, *7-21*
spur gear (crankshaft) *7-13*
stabilizer bar *5-19*
starter/generator *6-25*, *6-27*
stator shell *13-3*, *13-5*
steel bushing *1-35*, *5-9*, *5-13*, *5-15*, *5-17*
steering column *5-3*
steering column bearing press tool *16-5*
steering column mounting bracket *5-3*
steering column retaining ring tool *16-5*
steering column shaft *5-3*
steering geer box *5-5*
steering wheel *5-3*
steering wheel puller tool *16-7*
stem, valve *2-3*, *2-5*
stiffener
- flywheel side *7-27*
- PTO side *7-27*
- seat *1-25*, *1-27*

strain relief bushing *15-3*, *15-5*, *15-7*, *15-9*, *15-11*, *15-13*
strap, A-plate *5-7*, *5-11*
strap, seat bottom *1-25*, *1-27*, *1-29*
stud
- ball *4-13*, *6-3*, *6-7*, *6-15*, *11-3*
- engine mounting *7-27*
- lug *5-9*, *5-13*, *11-7*, *14-3*
- short ball *12-5*
- wiper switch adjusting *12-5*

support
- accelerator pivot rod *4-13*, *4-15*
- front body *1-7*, *1-17*
- rear seat *1-29*
- seat *1-11*, *1-23*
- seat back *1-11*, *1-23*
- stabilizer bar bushing *5-19*

suppressor, voltage *6-13*, *12-37*
switch
- 4-position slide *15-7*, *15-9*, *15-13*
- forward/reverse *12-13*, *12-21*
- key *6-9*, *6-19*, *12-3*, *12-39*
- light *6-19*, *12-39*
- limit *6-3*, *6-7*, *6-15*, *6-19*, *12-5*, *12-13*, *12-27*, *12-39*
- limit, sealed *12-13*
- tow/run *12-21*

switch brush *12-5*
synchronizer clutch hub *11-5*
synchronizer ring *11-5*

T

12-volt battery *6-29*
12-volt solenoid *6-7*, *6-15*
3-pin plug *12-5*, *12-9*, *12-17*, *12-43*, *13-5*
3-pin plug and wedge lock *12-21*
3-pin receptacle *12-5*, *12-17*, *12-27*
3-pin receptacle and wedge lock *12-21*
3-wire and receptacle *12-5*
3-wire plug *12-51*
3/8-amp fuse *12-23*
20-amp fuse *12-45*
tachometer *16-7*
taillight *6-23*
taillight assembly *6-21*, *6-23*, *12-47*, *12-57*
tailskirt *1-33*
tapered compression spring *5-3*
tapered leaf spring *5-9*
tappet *7-11*
terminal block *6-17*, *12-37*, *12-43*, *12-45*
terminal block (controller) *12-25*
terminal hardware (starter/generator) *6-25*
tester, continuity *16-5*
thermometer, battery *16-3*
throttle bracket gasket *8-9*
thrust bearing *5-9*
tie rod *5-7*, *5-11*
tie, wire *5-5*, *6-17*, *8-15*, *12-5*, *12-21*, *12-25*, *12-27*, *12-37*, *12-41*, *12-43*
tilt bed *1-35*
tire *2-3*, *2-5*
tool
- accelerator pedal adjustment *16-3*
- brake adjustment *16-3*
- brake pedal adjustment *16-3*
- brake pedal tension *16-3*
- cam installation *16-3*
- clutch alignment *16-3*
- drive clutch holder *16-3*
- governor shaft installation *16-5*
- steering column bearing press *16-5*
- steering column retaining ring *16-5*
- steering wheel puller *16-7*
- transaxle axle seal *16-7*
- transaxle pinion seal *16-7*
- transmission *16-7*

tool kit, clutch *16-3*
touch-up paint *16-7*
tow/run switch *12-21*
transaxle *14-3*
transaxle axle seal tool *16-7*
transaxle pinion seal tool *16-7*
transaxle, unitized *11-3*
transformer *15-3*, *15-5*, *15-7*, *15-9*, *15-11*, *15-13*
transmission tool *16-7*
trim
- front body *1-3*
- seat bottom *1-25*, *1-27*
- side bumper guard *1-3*

tube
- 7 mm (flywheel) *7-17*
- axle *11-7*, *14-3*
- crankcase vent *8-9*
- oil filler *7-3*, *7-15*

tune-up kit *16-7*
turn signal lens *6-17*, *12-37*

U

unitized transaxle *11-3*
upper pinion bearing *5-5*
urethane bushing *1-35*, *5-7*, *5-9*, *5-11*, *5-13*, *5-15*, *5-17*

V

valve *7-21*
- choke *8-13*, *8-15*
- exhaust *7-9*, *7-21*
- fuel pickup tube *8-3*
- intake *7-9*, *7-21*
- oil *7-9*
- stem *2-3*, *2-5*

valve clearance adjuster screw *16-7*
valve guide *7-9*, *7-21*
valve guide reamer *16-7*
valve seal *7-9*, *7-21*
valve seat *7-7*
valve seat cutter *16-7*
valve seat cutter guide *16-7*
valve seat t-wrench *16-7*
valve spring compressor *16-7*
valve spring retainer *7-9*
valve spring, engine *7-9*, *7-21*
vehicle care kit *16-7*
vent barb *8-3*
vent line *8-3*, *8-9*
vent, fuel tank *8-3*
volt ohm meter *16-7*
voltage limiter *6-17*, *12-43*
voltage regulator *6-7*, *6-15*
voltage suppressor *6-13*, *12-31*, *12-35*, *12-37*, *12-51*, *12-55*

W

warning light, battery *12-3*, *12-39*
warning light, low oil *6-9*
washer
- key switch *6-9*, *6-19*, *12-3*
- kingpin wave *5-9*, *5-13*

INDEX

mounting *10-3*, *10-5*
nylon flat *6-3*
spring *11-5*
thrust (transaxle) *11-5*
wedge (steering column) *5-3*
wedge, bearing puller *16-3*
weight, counterbalance *7-13*, *7-25*
weight, drive clutch *10-3*
weldment, armrest *1-21*
weldment, press *16-3*
wheel rim *2-3*, *2-5*
wheel, steering *5-3*
wiper switch *12-5*
wire and terminal *12-25*, *12-43*
wire assembly
battery charger *15-3*, *15-5*, *15-7*, *15-9*, *15-11*, *15-13*
fe290 engine *7-3*
fe350 engine *7-15*
forward/reverse switch *12-21*
IQDM port *12-21*
multi-step potentiometer *12-5*
sense lead *12-23*, *12-45*
starter/generator *6-27*
wire clamp *7-5*
wire harness
gasoline *6-5*, *6-13*
headlight *6-17*, *12-37*
IQ System *12-19*
lighting *12-31*, *12-35*, *12-51*, *12-55*
power *12-31*, *12-35*, *12-51*, *12-55*
PowerDrive System 48 *12-7*, *12-11*
wire latch *8-13*, *8-15*
wire terminal *12-17*
wire tie *5-5*, *6-17*, *8-15*, *12-5*, *12-21*, *12-25*, *12-37*, *12-41*, *12-43*
wire, jumper *15-9*
wire, lead *7-5*, *7-17*
wood insert *1-9*
woodruff key *6-25*, *11-3*
wrench, spanner *16-5*

Y

yoke spring *5-5*
yoke, gear *16-5*

Z

z-bracket *12-25*

Your Comments Are Appreciated

Please select your category:

- ☐ Distributor/Dealer
- ☐ Individual Owner
- ☐ Club Car Associate/Representative
- ☐ Technician
- ☐ Golf Course Superintendent
- ☐ Other: _____

In order to help us better serve you, please rate this publication in the following catgories:

	Poor	Fair	Average	Good	Excellent
1. Ease of Understanding	☐	☐	☐	☐	☐
2. Ease of Finding Information	☐	☐	☐	☐	☐
3. Clarity of Illustrations	☐	☐	☐	☐	☐
4. Index Usability	☐	☐	☐	☐	☐

Comments/Suggestions

_____

_____

_____

_____

_____

_____

_____

_____

_____

_____

_____

_____

Please fax a copy of this page to (706) 228-2662.

Thank You!

Club Car Technical Publication Department

Club Car®

NOTES

Club Car®

NOTES

Transportation and Utility Vehicles
Club Car Inc.
P.O. Box 204658
Augusta, GA 30917-4658